USB 3.1 C Technical Analysis and Design Tips

Würth Elektronik
Timo Dreyer

© All rights reserved by Wurth Electronics, also in the event of industrial property rights. All rights of disposal such as copying and redistribution rights with us.

Table of Content

- Why Type USB 3.1 & Type C
- History of USB and Evolution
- Electrical Performance
- Mechanical Performance
- RF Behaviour
- Conclusion

© All rights reserved by Wurth Electronics, also in the event of industrial property rights. All rights of disposal such as copying and redistribution rights with us.

Why Type USB 3.1 & Type C
Market trends for USB (3.1)

- **Telecommunications & entertainment**
  - Smartphones:

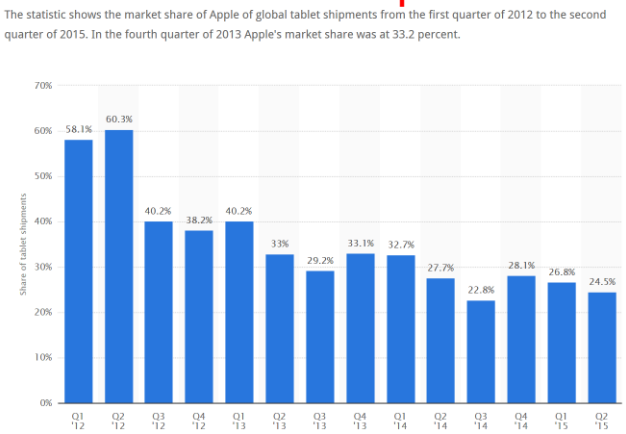

In Q2 2015, Apple has “only” 24,5% of market share with Iphone with their lightning connector.

Moreover, market will constantly grow:

<u>+ 34% users from 2015 to 2018</u>

  - Tablets / Laptops & Computers: For 2016 + 2017:

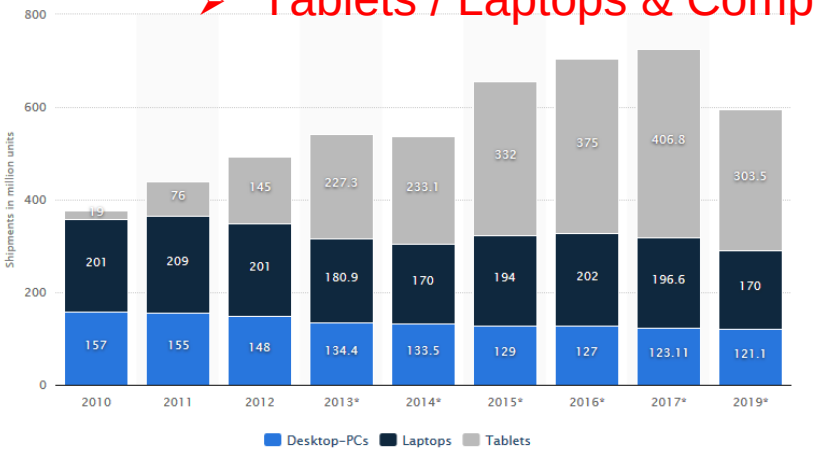

- Tablets: 782 kk units (+22 %)
- Laptops: 399 kk units (+ 2 %)
- Computers: 250 kk units (-5%)

Top 25 Countries, Ranked by Smartphone Users, 2013-2018
millions

	2013	2014	2015	2016	2017	2018
1. China*	436.1	519.7	574.2	624.7	672.1	704.1
2. US**	143.9	165.3	184.2	198.5	211.5	220.0
3. India	76.0	123.3	167.9	204.1	243.8	279.2
4. Japan	40.5	50.8	57.4	61.2	63.9	65.5
5. Russia	35.8	49.0	58.2	65.1	71.9	76.4
6. Brazil	27.1	38.8	48.6	58.5	66.6	71.9
7. Indonesia	27.4	38.3	52.2	69.4	86.6	103.0
8. Germany	29.6	36.4	44.5	50.8	56.1	59.2
9. UK**	33.2	36.4	39.4	42.4	44.9	46.4
10. South Korea	29.3	32.8	33.9	34.5	35.1	35.6
11. Mexico	22.9	28.7	34.2	39.4	44.7	49.9
12. France	21.0	26.7	32.9	37.8	41.5	43.7
13. Italy	19.5	24.1	28.6	32.2	33.7	37.0
14. Turkey	15.3	22.6	27.8	32.4	37.2	40.7
15. Spain	18.9	22.0	25.0	26.9	28.4	29.5
16. Philippines	14.8	20.0	24.8	29.7	34.8	39.4
17. Nigeria	15.9	19.5	23.1	26.8	30.5	34.0
18. Canada	15.2	17.8	20.0	21.7	23.0	23.9
19. Thailand	14.4	17.5	20.4	22.8	25.0	26.8
20. Vietnam	12.4	16.6	20.7	24.6	28.6	32.0
21. Egypt	12.6	15.5	18.2	21.0	23.6	25.8
22. Colombia	11.7	14.4	16.3	18.2	19.7	20.9
23. Australia	11.4	13.2	13.8	14.3	14.7	15.1
24. Poland	9.4	12.7	15.4	17.4	19.4	20.8
25. Argentina	8.8	10.8	12.6	14.1	15.6	17.0
Worldwide* **	**1,311.2**	**1,639.0**	**1,914.6**	**2,155.0**	**2,380.2**	**2,561.8**

*Note: individuals of any age who own at least one smartphone and use the smartphone(s) at least once per month; *excludes Hong Kong; **forecast from Aug 2014; ***includes countries not listed*
Source: eMarketer, Dec 2014
182905 www.eMarketer.com

Sources: http://www.emarketer.com & http://www.statista.com

© All rights reserved by Wurth Electronics, also in the event of industrial property rights. All rights of disposal such as copying and redistribution rights with us.

Why Type USB 3.1 & Type C
Market trends for USB (3.1)

- **Storage / USB Sticks:**
  - Annual shipment of USB sticks could reach 556 kk units in 2020
  - US Biggest market
  - +8% growth is expected for Asia / Pacific area

- **Power supply:**

  USB connectors are more and more often used as power suppliers:
  - Customers are asking for high current connectors (1.8A / 2.1A & 3A)
  - Smartphones, tablets, navigation systems are always requesting more & more power and need to be charged faster

- **Survey on 90 WE customers in America:**

  USB 3.1 Type C fits with customers' expectations with:
  - Higher durability
  - Higher data rate
  - Higher current capability (Power supply)
  - Reversibility feature
  - Short Type (for integrated applications)

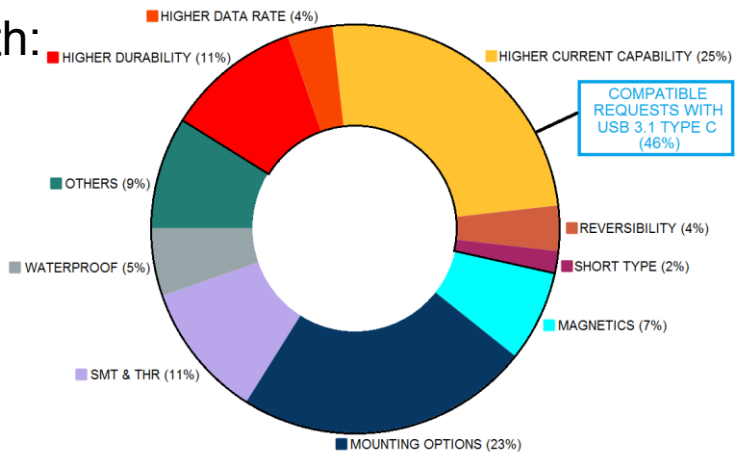

Sources: http://www.strategyr.com

© All rights reserved by Wurth Electronics, also in the event of industrial property rights. All rights of disposal such as copying and redistribution rights with us.

A little bit of history – *USB Versions?*

- USB = **Universal** Serial Bus

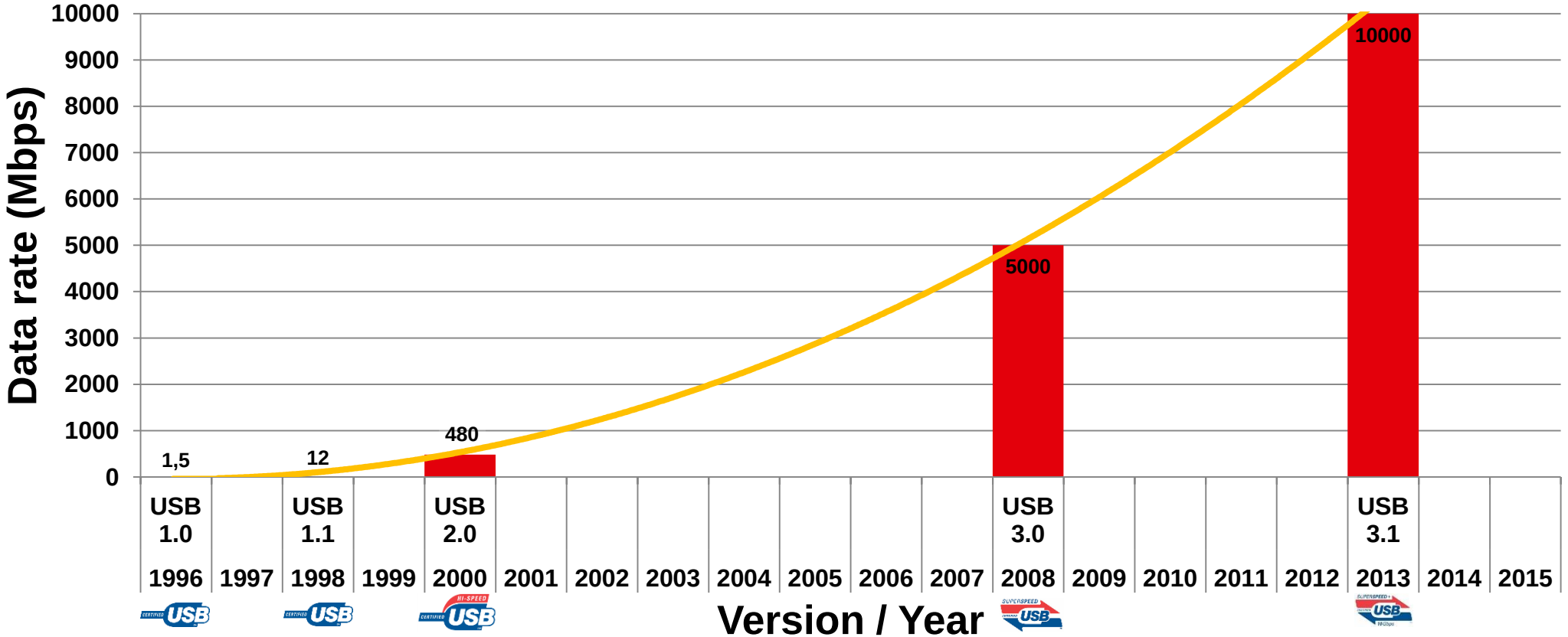

© All rights reserved by Wurth Electronics, also in the event of industrial property rights. All rights of disposal such as copying and redistribution rights with us.

USB Overview - *USB Versions*

- **USB 1.x – January 1996**
  - Low-speed: 1.5Mbps
  - Full-speed: 12 Mbps
- **USB 1.1 – July 1998**
- **USB 2.0 – April 2000**
  - Full backwards compatibility with USB 1.1
  - Adds high-speed: 480 Mbps
- **USB 3.0 – December 2008**
  - Super-speed: 5 Gbps
  - Backwards-compatible to USB 2.0 standard
- **USB 3.1 – August 2013**
  - Super-speed +: 10 Gbps
  - Backwards-compatible to USB 3.0 standard

© All rights reserved by Wurth Electronics, also in the event of industrial property rights. All rights of disposal such as copying and redistribution rights with us.

A little bit of history – *From 2.0…*

Year/Version	USB 2.0 – 2000
➢ A	
➢ B	
➢ Mini	
➢ Micro	
➢ Data rate	480 Mbps
➢ Power	500mA / 5V

© All rights reserved by Wurth Electronics, also in the event of industrial property rights. All rights of disposal such as copying and redistribution rights with us.

USB 2.0 Overview – *Mini & Micro Types*

- 5 contacts on Mini and Micro types
- 4 contacts on “Standard” types

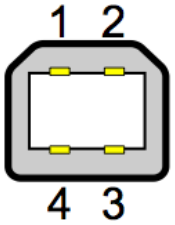

➢ WHY?

Mini-AB

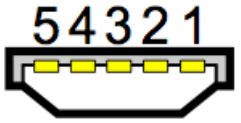

Mini-A

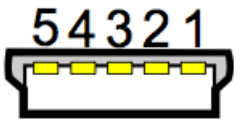

Mini-B

Contact No.	Signal Name	Description
1	VBUS	Power
2	Data-	USB 2.0 Twisted pair
3	Data+	
4	GND	Ground for power return
Shell	Shield	

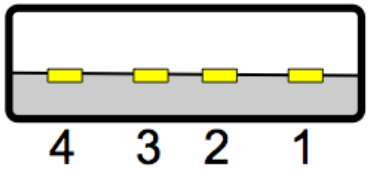

Contact No.	Signal Name	Description
1	VBUS	Power
2	Data-	USB 2.0 Twisted pair
3	Data+	
4	ID	OTG identification
5	GND	Ground for power return
Shell	Shield	

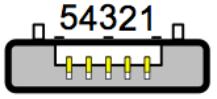

Micro-A

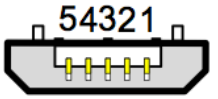

Micro-B

- Cable A to Micro/Mini: loose of 1 wire – information

© All rights reserved by Wurth Electronics, also in the event of industrial property rights. All rights of disposal such as copying and redistribution rights with us.

A little bit of history – …to USB 3.0 …

Year/Version	USB 2.0 – 2000	USB 3.0 – 2008
➢ A		
➢ B		
➢ Mini		
➢ Micro		
➢ Data rate	480 Mbps	5000 Mbps
➢ Power	500mA / 5V	900mA / 5V

© All rights reserved by Wurth Electronics, also in the event of industrial property rights. All rights of disposal such as copying and redistribution rights with us.

USB 3.0 Overview - *History / Benchmark*

- Based on Microsoft tests: (showed at WinHEC 2008 on Nov 6)

Transfer of a 25GB Blu-ray movie:
USB 1.1: 9.3 hours
USB 2.0: 13.9 minutes
USB 3.0: 70 seconds

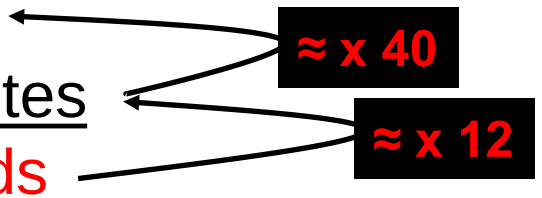

USB version	Data rate
USB 1.0	1,5 Mbps
USB 1.1	12 Mbps
USB 2.0	480 Mbps
USB 3.0	5 Gbps

© All rights reserved by Wurth Electronics, also in the event of industrial property rights. All rights of disposal such as copying and redistribution rights with us.

USB 3.0 Overview - *Architecture and protocol*

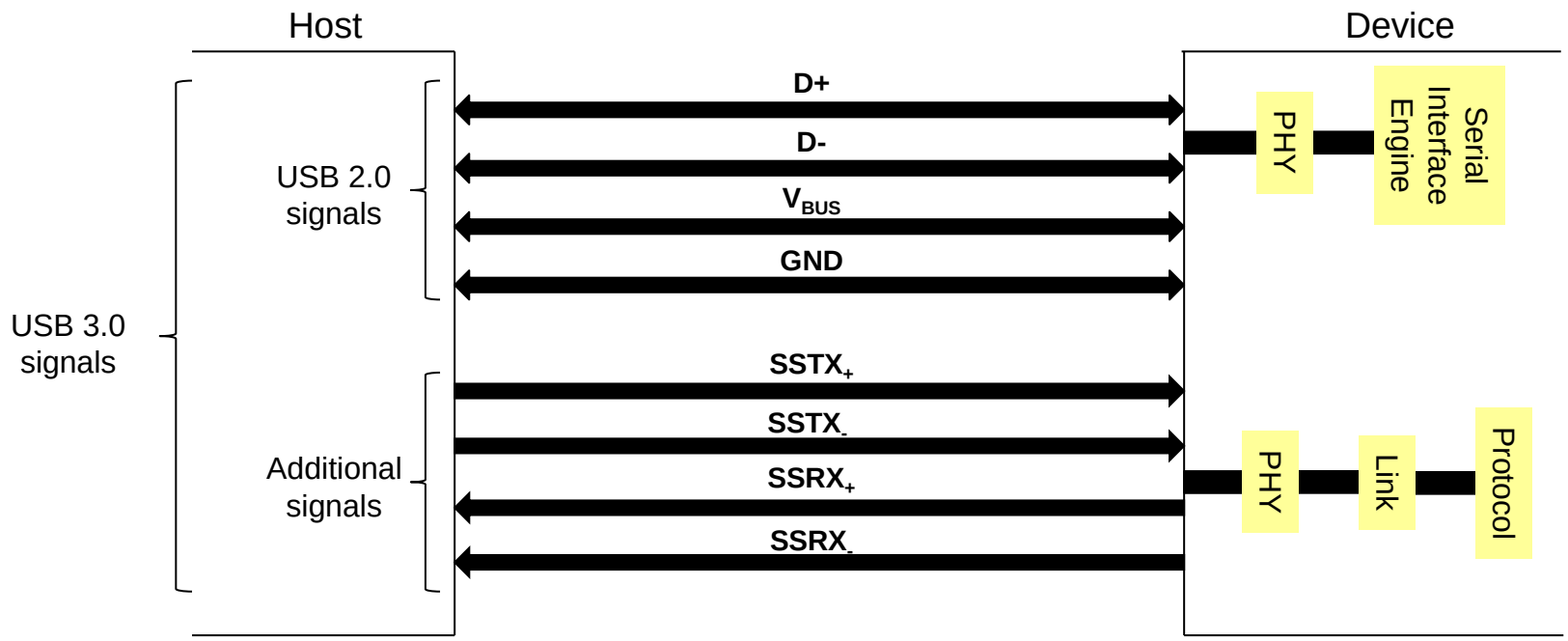

Note: Tx & Rx are defined from the host perspective

© All rights reserved by Wurth Electronics, also in the event of industrial property rights. All rights of disposal such as copying and redistribution rights with us.

USB 3.0 Overview – *Power Management*

With up to 150 mA per unit (+50 % compared to USB 2.0) and up to 6 units together, USB 3.0 can carry up to:

900 mA * 5V = 4,5W = P_{SS_ACTIVE} Vs. 500 mA * 5V = 2,5W = P_{HS_ACTIVE}

This means a total **80% increase compared to USB 2.0**.

$$P_{TOTAL} = PI_{DLE} + (P_{ACTIVE} - PI_{DLE}) * \alpha$$

$$P_{TOTAL3_} PI_{DLE} + 1{,}8 * (P_{HS_ACTIVE} - PIDLE) * \alpha_{3.0}$$

$$P_{TOTAL2_} PI_{DLE} + (P_{HS_ACTIVE} - PIDLE) * \alpha_{2.0}$$

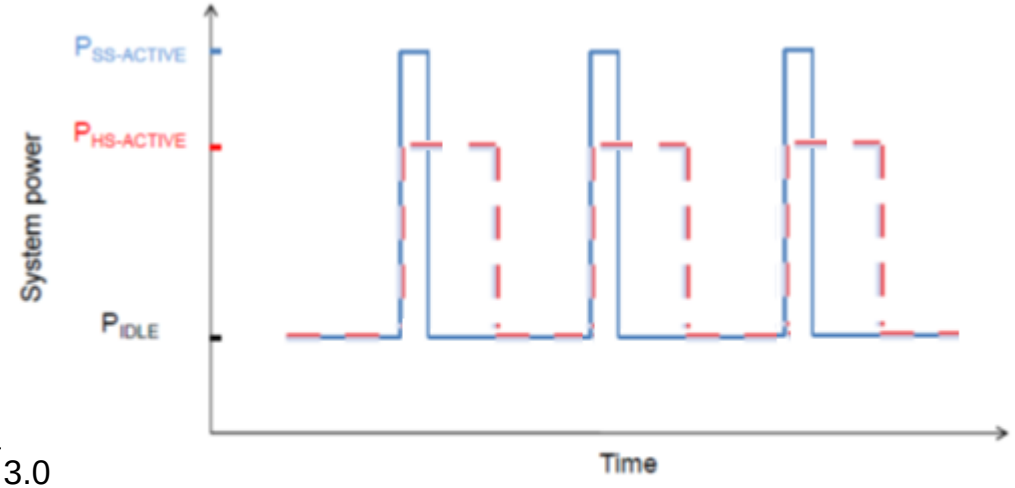

P_{IDLE} : system power when no data transfer is taking place
$P_{HS-ACTIVE}$: system power in High Speed (2.0) mode
$P_{SS-ACTIVE}$: system power in Super Speed (3.0) mode

© All rights reserved by Wurth Electronics, also in the event of industrial property rights. All rights of disposal such as copying and redistribution rights with us.

A little bit of history – …to USB 3.1 ! ! !

Year/Version	USB 2.0 – 2000	USB 3.0 – 2008	USB 3.1 – 2013
➢ A			
➢ B			
➢ Mini		✖	✖
➢ Micro			
➢ C			
➢ Data rate	480 Mbps	5000 Mbps	10000 Mbps
➢ Power	500mA / 5V	900mA / 5V	5A / 5V

© All rights reserved by Wurth Electronics, also in the event of industrial property rights. All rights of disposal such as copying and redistribution rights with us.

Specification, Requirements & Performances
Electrical

- Contact resistance
  - V_{BUS} & GND Pins : 30mΩ max
  - Other Pins: 50mΩ max
  - $\Delta_{CONTACT\ RESISTANCE}$: 10mΩ max after mating cycles
- Insulation resistance > 100MΩ
- Dielectric Withstanding Voltage > 100MΩ
- Contact Current & Voltage rating:

Type	A		B		Micro B		C		
	Power Pins	Other Pins	Power Pins	Other Pins	Power Pins	Other Pins	Power Pins		Other Pins
Pin Number	1 & 4	-	1 & 4	-	1 & 5	-	A1,A4,A9 & A12 B1,B4,B9 & B12	A5 & B5	-
Current	1.8 A	0.25 A	1.8 A	0.25 A	1.8 A	0.25 A	1.5 / 5 A	1.25 A	0.25 A
Voltage	5 V								

© All rights reserved by Wurth Electronics, also in the event of industrial property rights. All rights of disposal such as copying and redistribution rights with us.

Specification, Requirements & Performances
Mechanical

- Durability – Mating cycles

	A	B	Micro B	C
Mating cycles	1500 or 5000		10000	
Speed	200 cycles / hour			

- Insertion force

	A	B	Micro B	C
Insertion force	< 35 N	< 35 N	< 35 N	5 N to 8 N
Speed	12.5 mm / min			

- Extraction force (retention)

	A	B	Micro B	C
Standard mating cycles	1500	1500	10000	10000
Before mating cycles	> 10 N	> 10 N	10 N < Force < 25 N	8 N < Force < 20 N
After 1000 cycles	-	-	-	6 N < Force < 20 N
At max. cycles	> 8 N	> 8 N	8 N < Force < 25 N	6 N < Force < 20 N
Speed	12.5 mm / min			

© All rights reserved by Wurth Electronics, also in the event of industrial property rights. All rights of disposal such as copying and redistribution rights with us.

USB 3.1 Product Overview

Type C Plug Design – 632 712 000 011

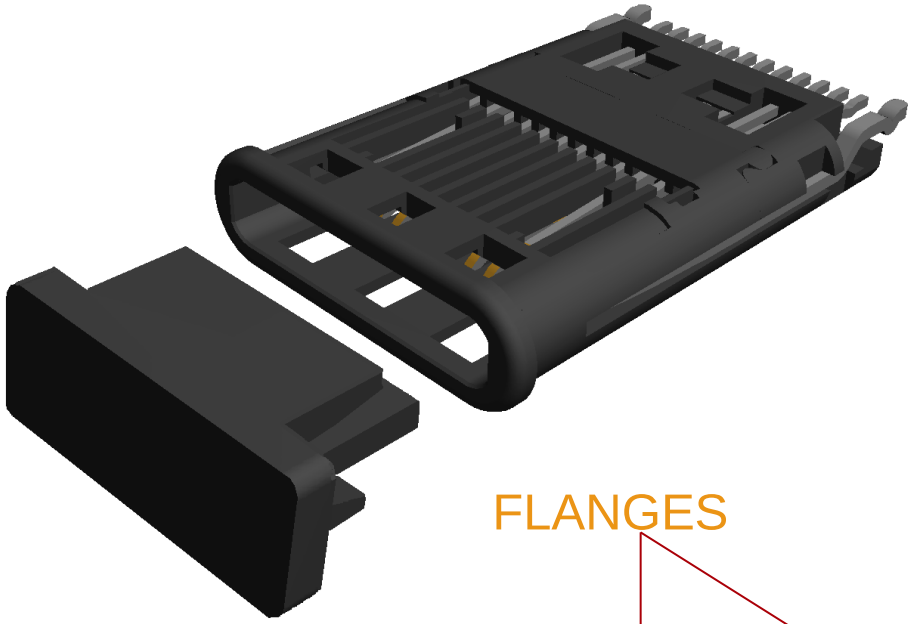

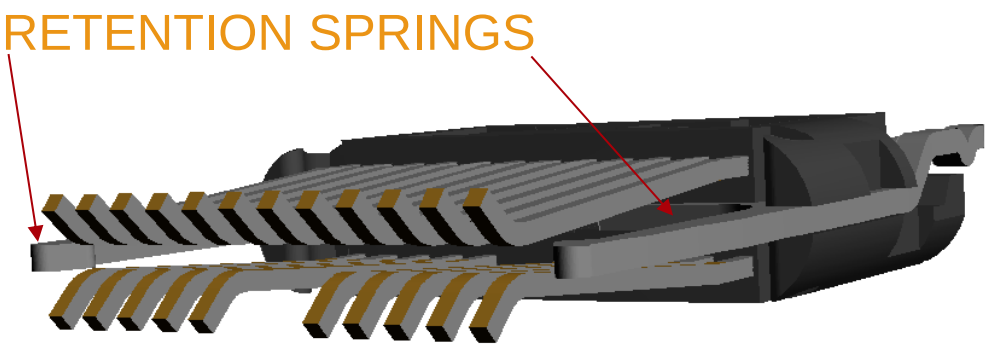

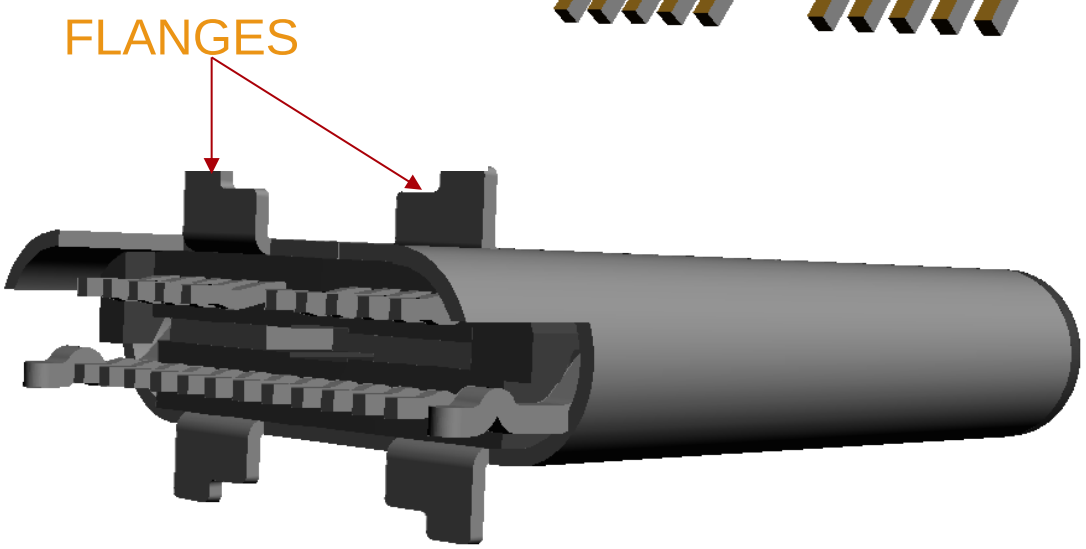

© All rights reserved by Wurth Electronics, also in the event of industrial property rights. All rights of disposal such as copying and redistribution rights with us.

Type C Receptacles

- **Order code:**

  632 723 X00 011

- Product features:
  1. Material: LCP; black
  2. Rated Current: 5 A
  3. Rated Voltage: 5 VDC (12VDC/20VDC)
  4. Durability: 10 000 cycles
  5. Soldering: JEDEC lead free wave and reflow soldering

X	PCB Thickness	Pin length
1	1.00 mm	1.50 mm
3	1.60 mm	1.90 mm

© All rights reserved by Wurth Electronics, also in the event of industrial property rights. All rights of disposal such as copying and redistribution rights with us.

Type C Receptacles – 632 723 x00 011

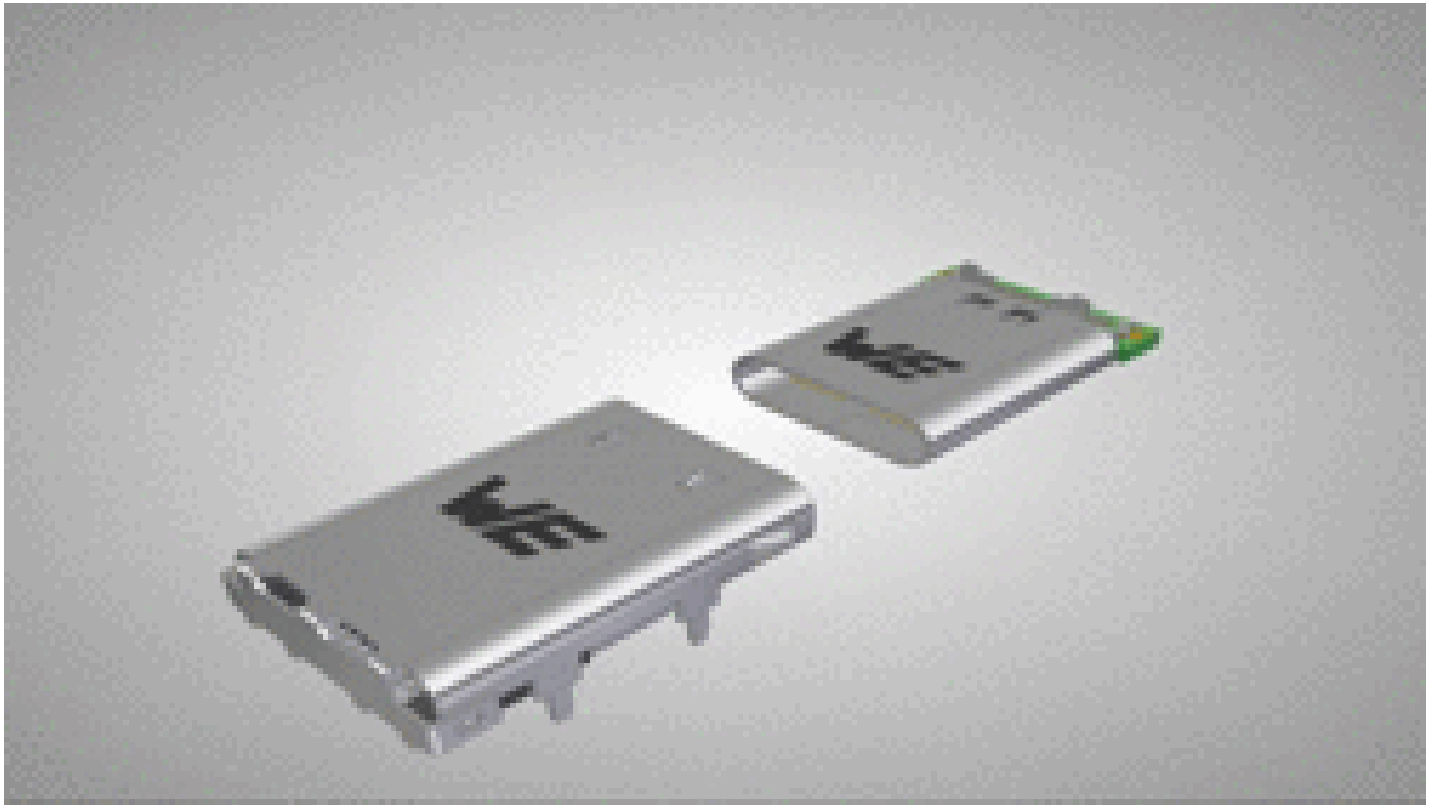

© All rights reserved by Wurth Electronics, also in the event of industrial property rights. All rights of disposal such as copying and redistribution rights with us.

Type C Receptacles – 632 723 x00 011

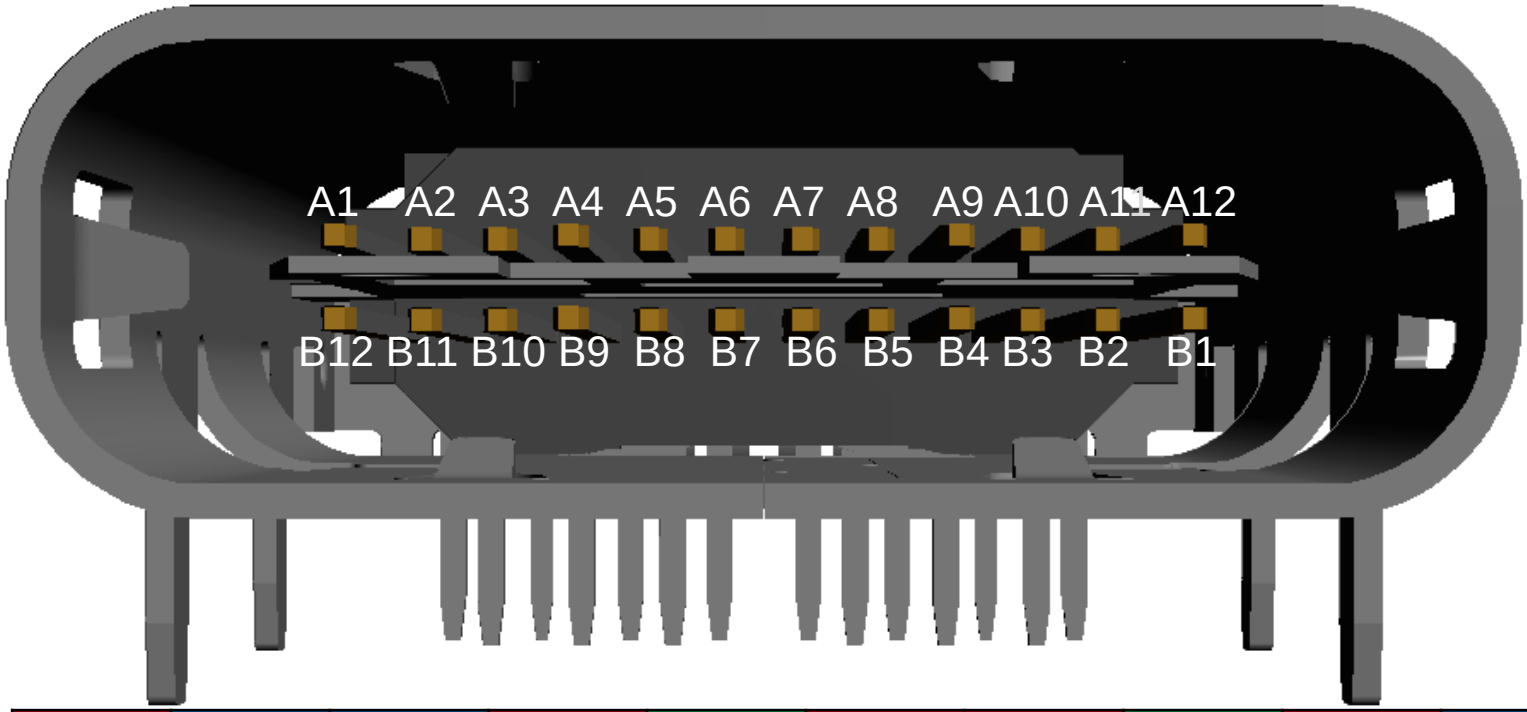

USB 2.0

USB 3.0

USB 3.1

A1	A2	A3	A4	A5	A6	A7	A8	A9	A10	A11	A12
GND	TX1+	TX1-	V_{BUS}	CC1	D+	D-	SBU1	V_{BUS}	RX2-	RX2+	GND
GND	RX1+	RX1-	V_{BUS}	SBU2	D-	D+	CC2	V_{BUS}	TX2-	TX2+	GND
B12	**B11**	**B10**	**B9**	**B8**	**B7**	**B6**	**B5**	**B4**	**B3**	**B2**	**B1**

© All rights reserved by Wurth Electronics, also in the event of industrial property rights. All rights of disposal such as copying and redistribution rights with us.

Type C Receptacles – 632 723 x00 011

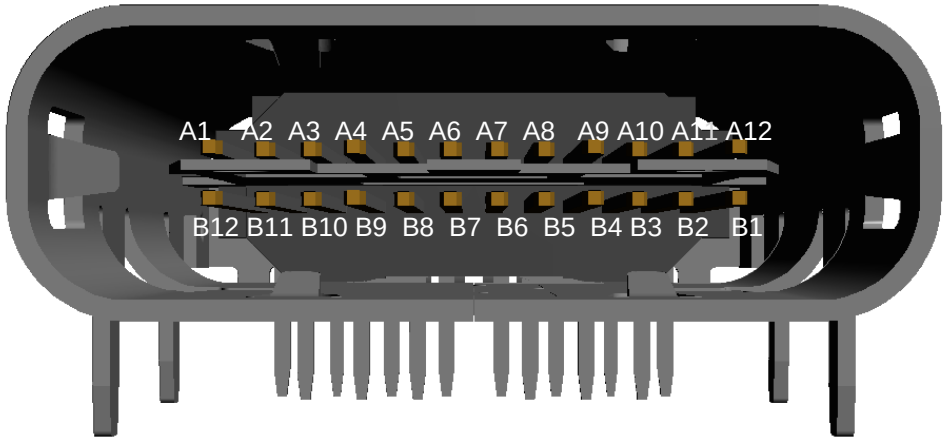

GND : All pins (4) are connected together

V_{BUS}: All pins (4) are connected together

D : USB 2.0 Data pair

TX : 2 transmission pairs

RX: 2 reception pairs

CC : Configuration Channel : Detection & Power Management + HTD Management

SBU: Side Band use : Alternate modes (other standards

A1	A2	A3	A4	A5	A6	A7	A8	A9	A10	A11	A12
GND	TX1+	TX1-	V_{BUS}	CC1	D+	D-	SBU1	V_{BUS}	RX2-	RX2+	GND
GND	RX1+	RX1-	V_{BUS}	SBU2	D-	D+	CC2	V_{BUS}	TX2-	TX2+	GND
B12	B11	B10	B9	B8	B7	B6	B5	B4	B3	B2	B1

© All rights reserved by Wurth Electronics, also in the event of industrial property rights. All rights of disposal such as copying and redistribution rights with us.

USB 3.1 Product Overview

Type C Receptacles Design – 632 723 x00 011

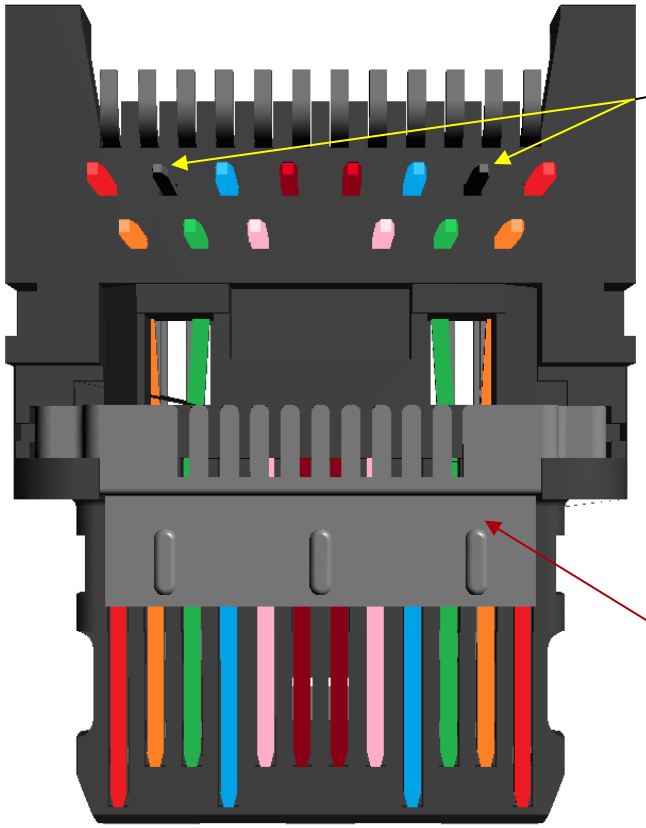

EXTRA GROUNDS

6 FLANGES

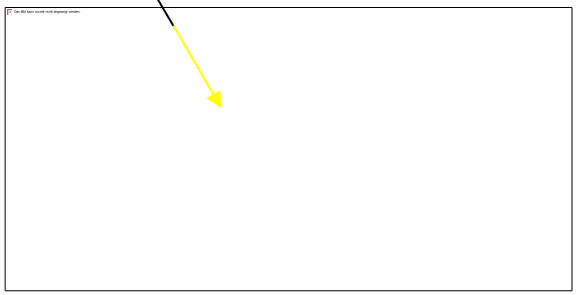

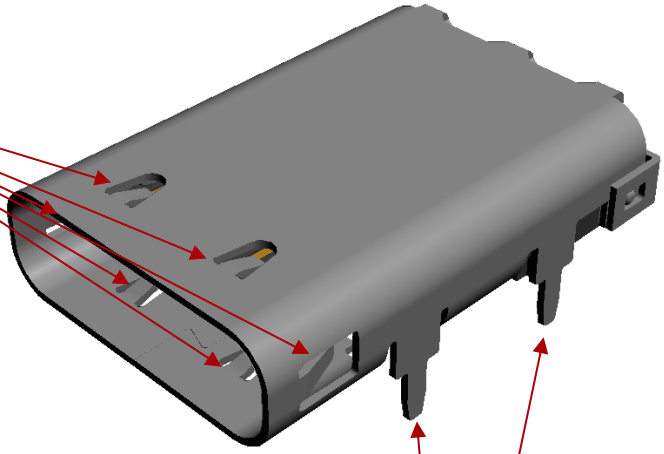

CONTACT HOLDER

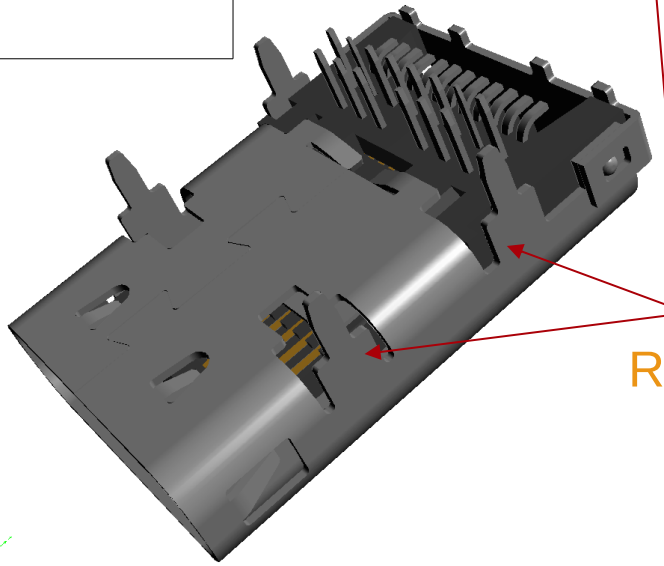

DIP RETENTION PINS

Bottom contacts (B): THT Pins
Top contacts (A) : SMT Pins

© All rights reserved by Wurth Electronics, also in the event of industrial property rights. All rights of disposal such as copying and redistribution rights with us.

Type C Plug – 632 712 000 011

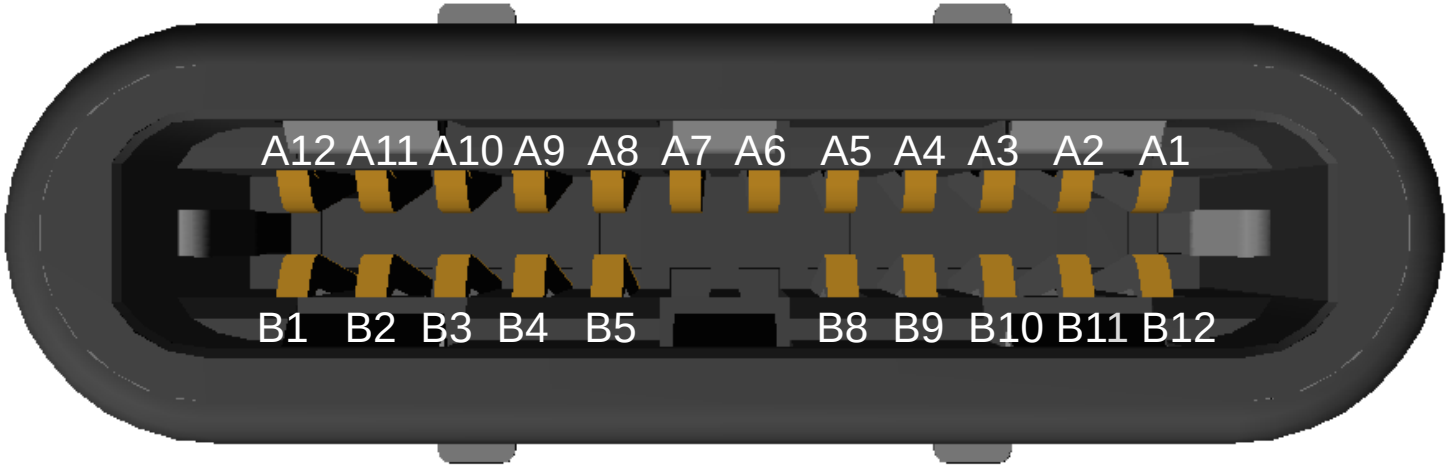

USB 2.0

USB 3.0

USB 3.1

A12	A11	A10	A9	A8	A7	A6	A5	A4	A3	A2	A1
GND	RX2+	RX2-	V_{BUS}	SBU1	D+	D-	CC1	V_{BUS}	TX1-	TX1+	GND
GND	TX2+	TX2-	V_{BUS}	CC2			SBU2	V_{BUS}	RX1-	RX1+	GND
B1	B2	B3	B4	B5			B8	B9	B10	B11	B12

© All rights reserved by Wurth Electronics, also in the event of industrial property rights. All rights of disposal such as copying and redistribution rights with us.

USB 3.1 Product Overview

Type C Plug Design – 632 712 000 011

Receptacle – Side crossed view

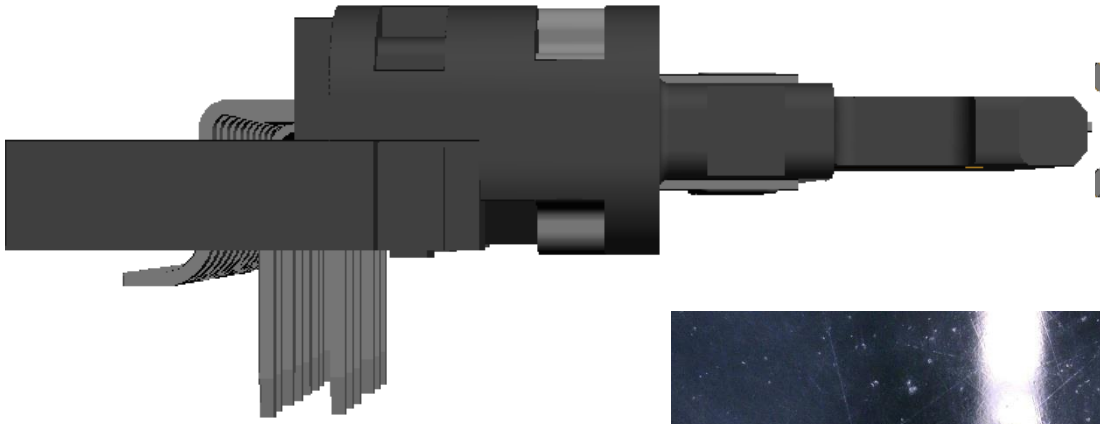

Plug – Side crossed view

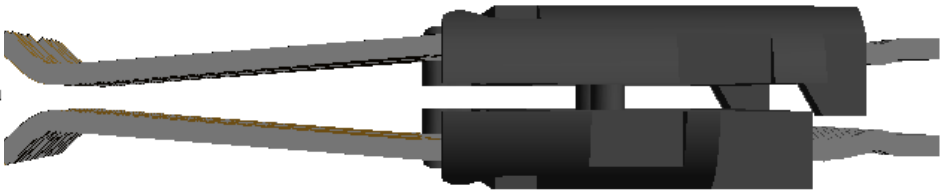

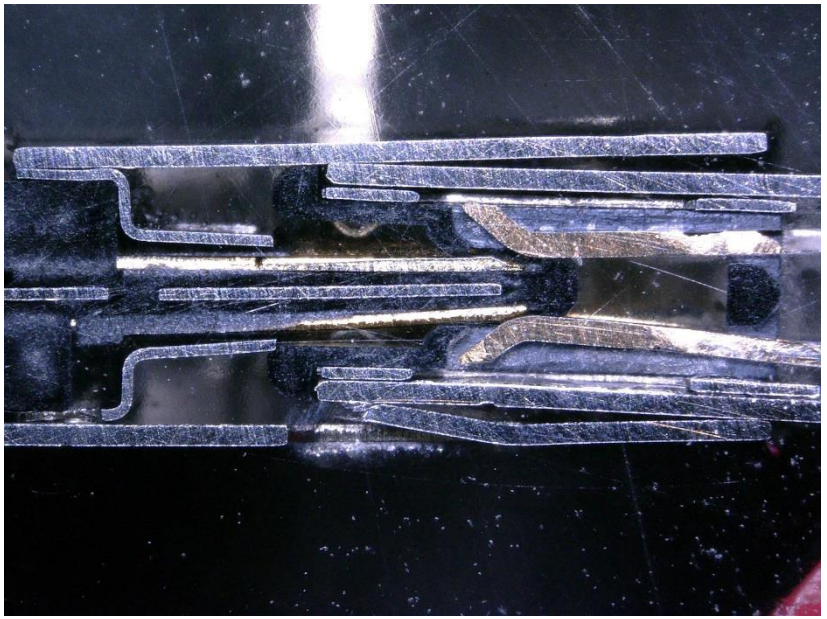

© All rights reserved by Wurth Electronics, also in the event of industrial property rights. All rights of disposal such as copying and redistribution rights with us.

Specification, Requirements & Performances

RF behavior

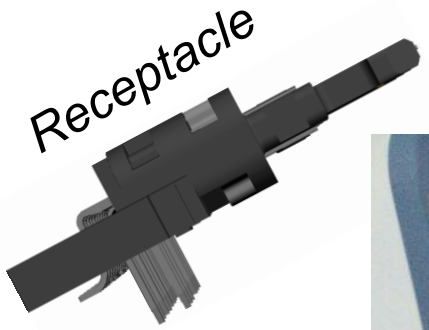

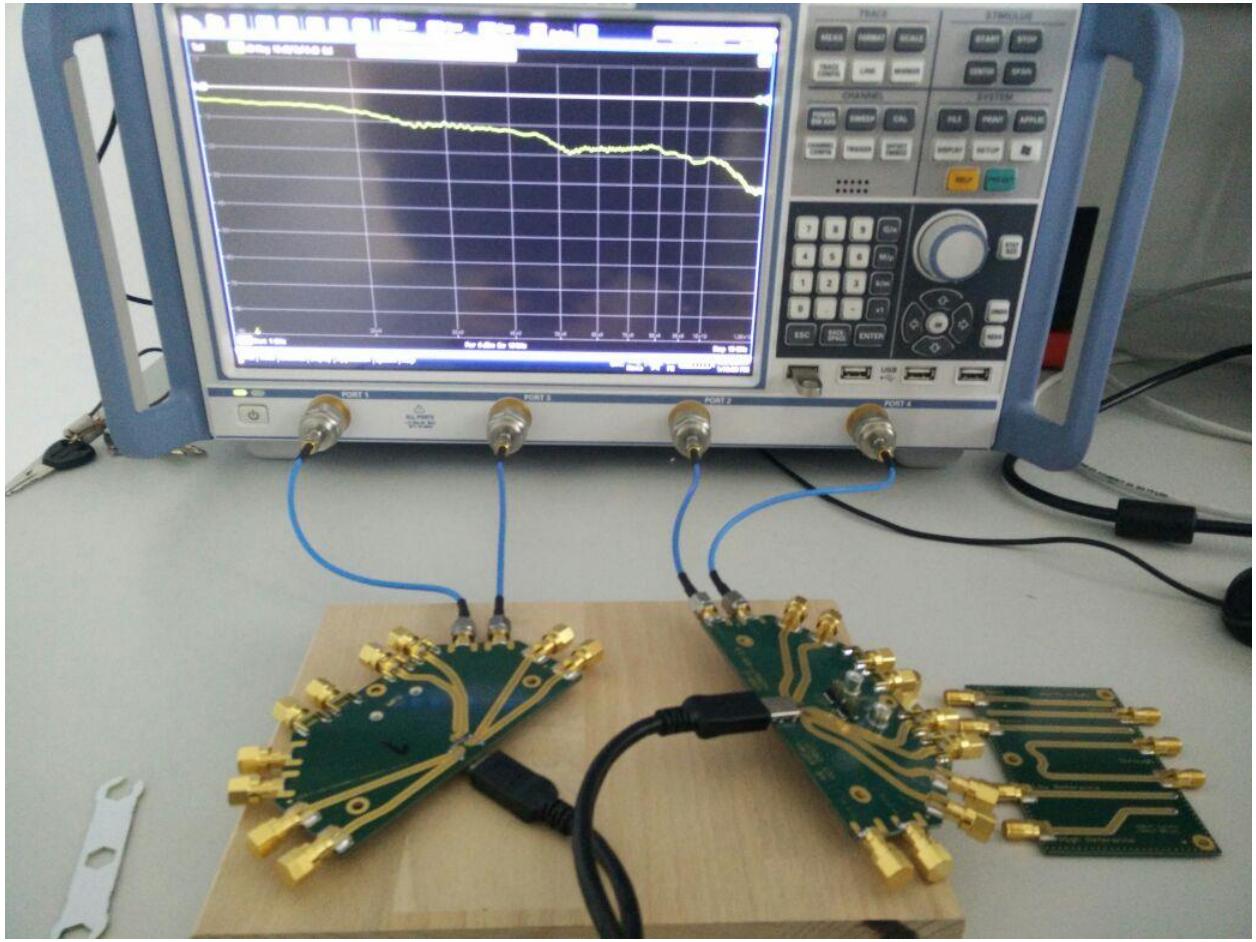

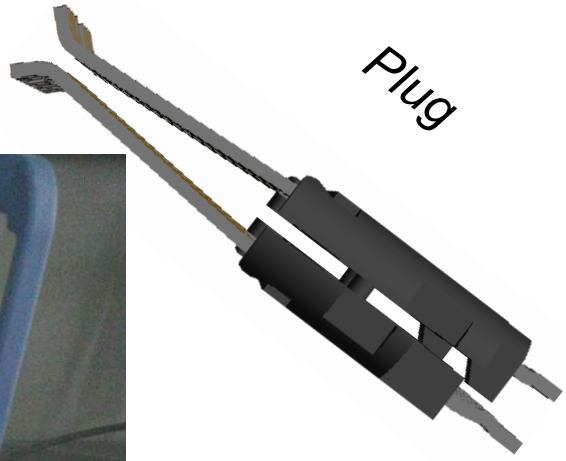

© All rights reserved by Wurth Electronics, also in the event of industrial property rights. All rights of disposal such as copying and redistribution rights with us.

Specification, Requirements & Performances

RF behavior

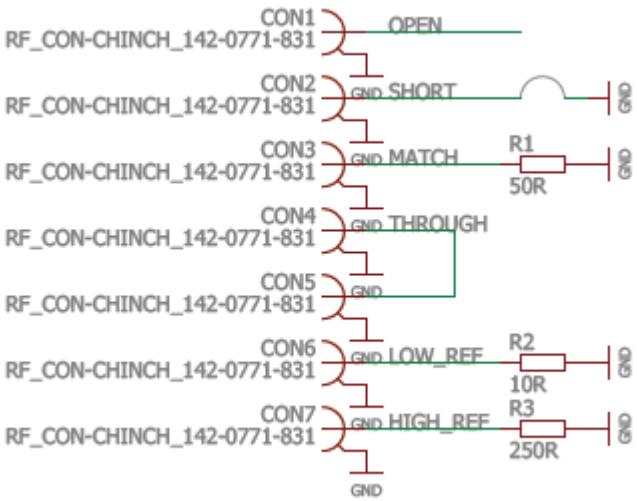

Calibration board

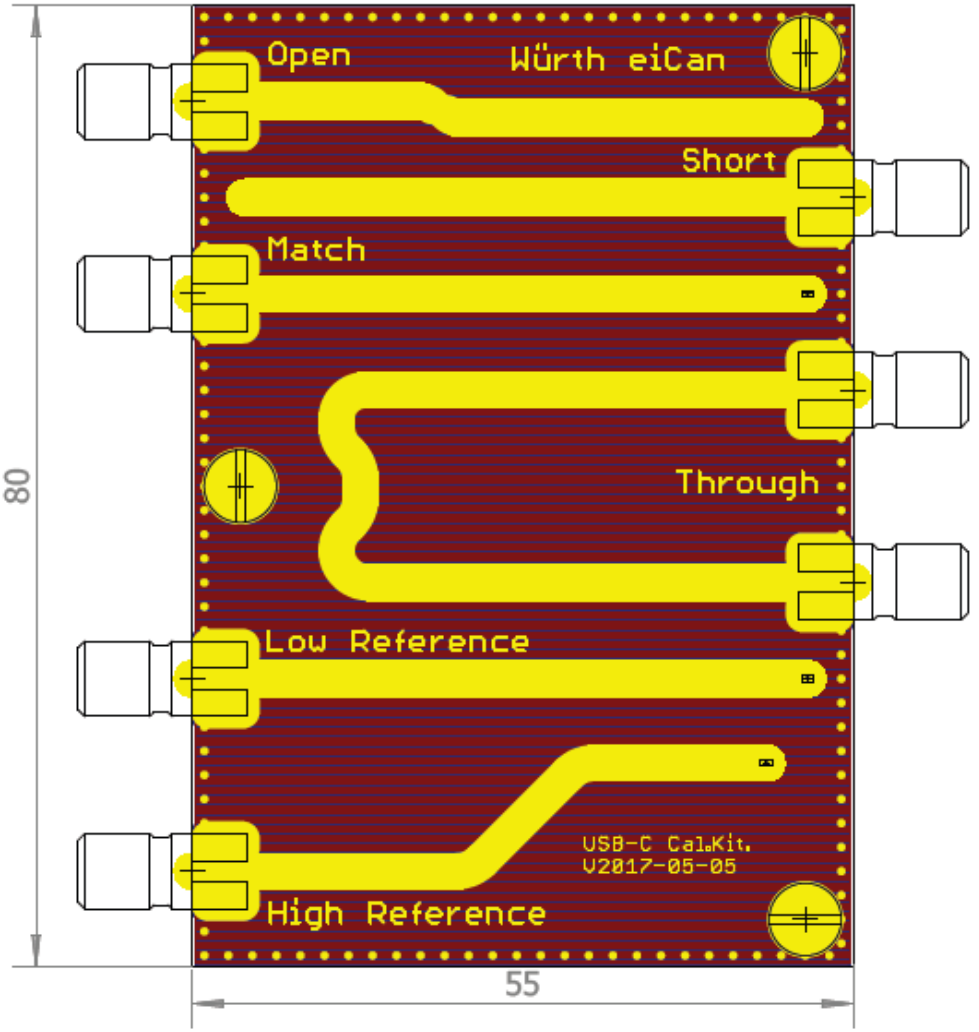

© All rights reserved by Wurth Electronics, also in the event of industrial property rights. All rights of disposal such as copying and redistribution rights with us.

Specification, Requirements & Performances

RF behavior

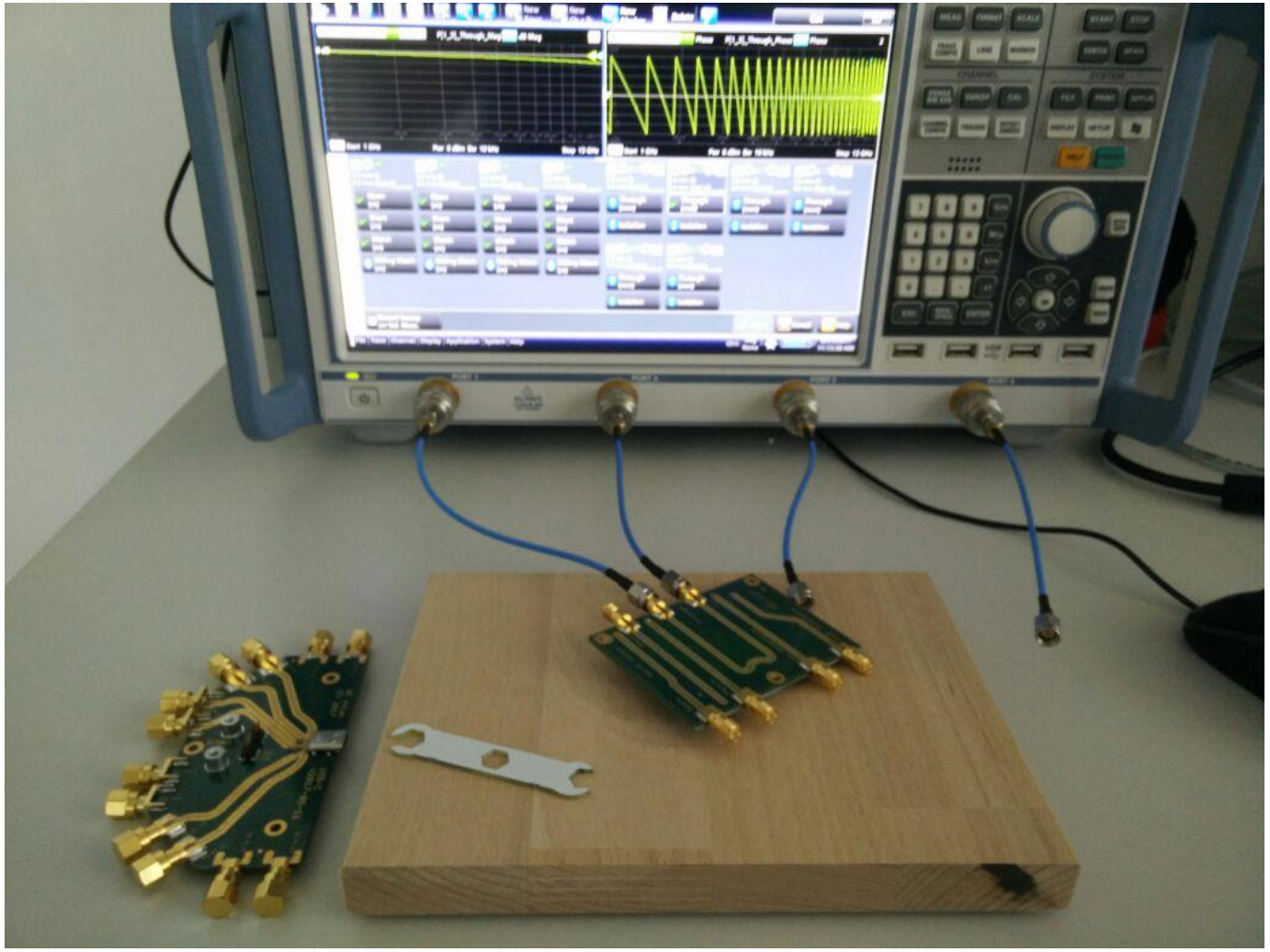

Calibration board

© All rights reserved by Wurth Electronics, also in the event of industrial property rights. All rights of disposal such as copying and redistribution rights with us.

Specification, Requirements & Performances

RF behavior

Polar Si8000 Controlled Impedance Quick Solver

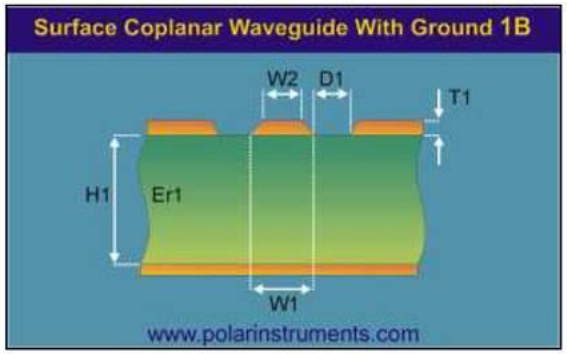

			Toleranz	Minimum	Maximum
Substrat 1 Dicke	H1	322,0000 +/-	0,0000	322,0000	322,0000
Substrat 1 Dielektrikum	Er1	4,6000 +/-	0,0000	4,6000	4,6000
Untere Leiterbreite	W1	450,0000 +/-	0,0000	450,0000	450,0000
Obere Leiterbreite	W2	420,0000 +/-	0,0000	420,0000	420,0000
Separation Massestreifen	D1	225,0000 +/-	0,0000	225,0000	225,0000
Leiterbahndicke	T1	50,0000 +/-	0,0000	50,0000	50,0000
Impedanz	Zo	50,13	------	0,00	0,00
Laufzeit (ps/m)	D	5725,350	------	0,000	0,000
Induktivität (nH/m)	L	287,010	------	0,000	0,000
Kapazität (pF/m)	C	114,211	------	0,000	0,000

Calibration board

The mirostrip conductor has to be like Würth Elektronik suggests.

© All rights reserved by Wurth Electronics, also in the event of industrial property rights. All rights of disposal such as copying and redistribution rights with us.

Specification, Requirements & Performances

RF behavior

© All rights reserved by Wurth Electronics, also in the event of industrial property rights. All rights of disposal such as copying and redistribution rights with us.

Specification, Requirements & Performances

RF behavior

Calibrationboard

The adjustment of the line:

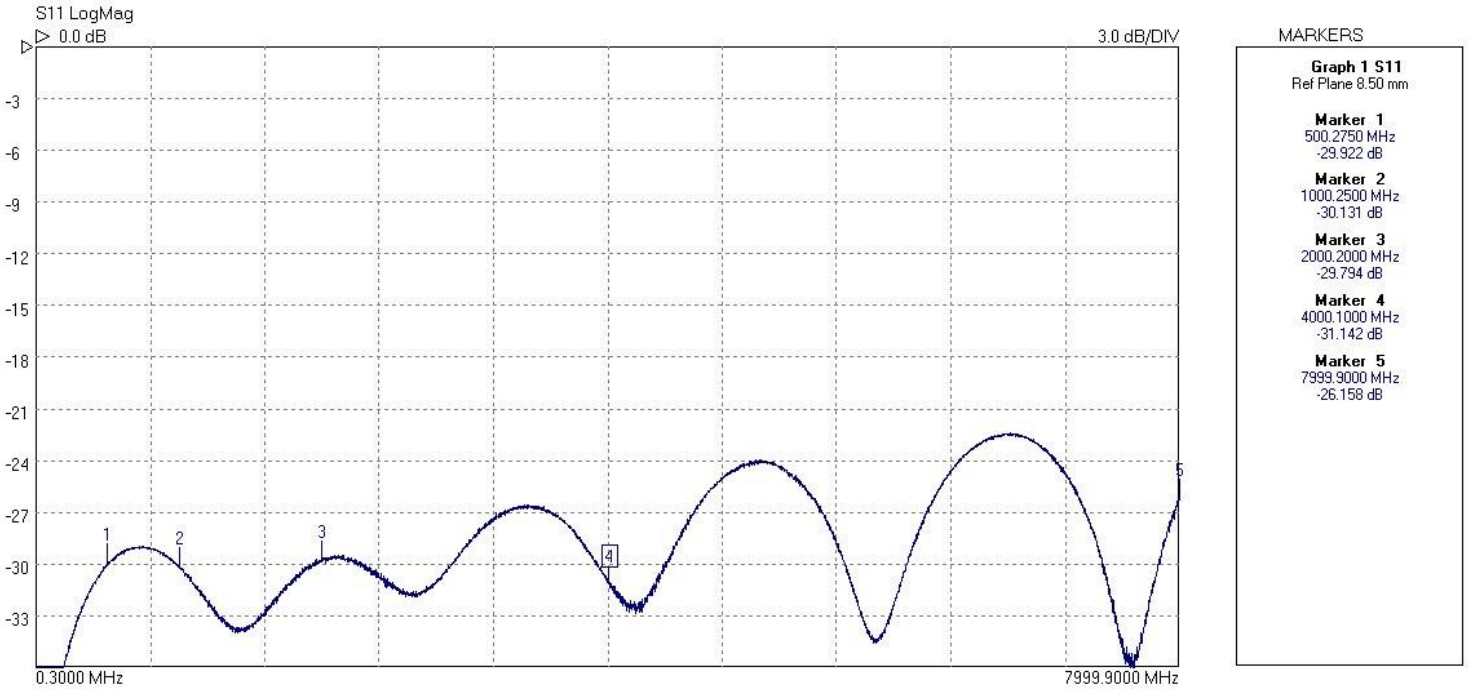

© All rights reserved by Wurth Electronics, also in the event of industrial property rights. All rights of disposal such as copying and redistribution rights with us.

Specification, Requirements & Performances

RF behavior

Calibrationboard

The adjustment of the line:

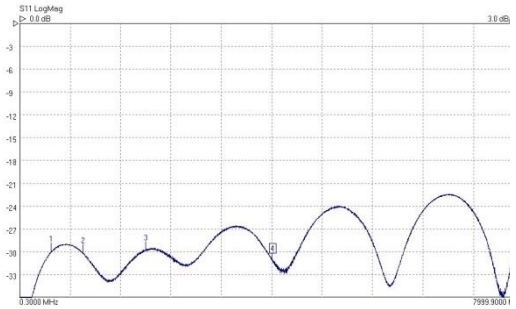

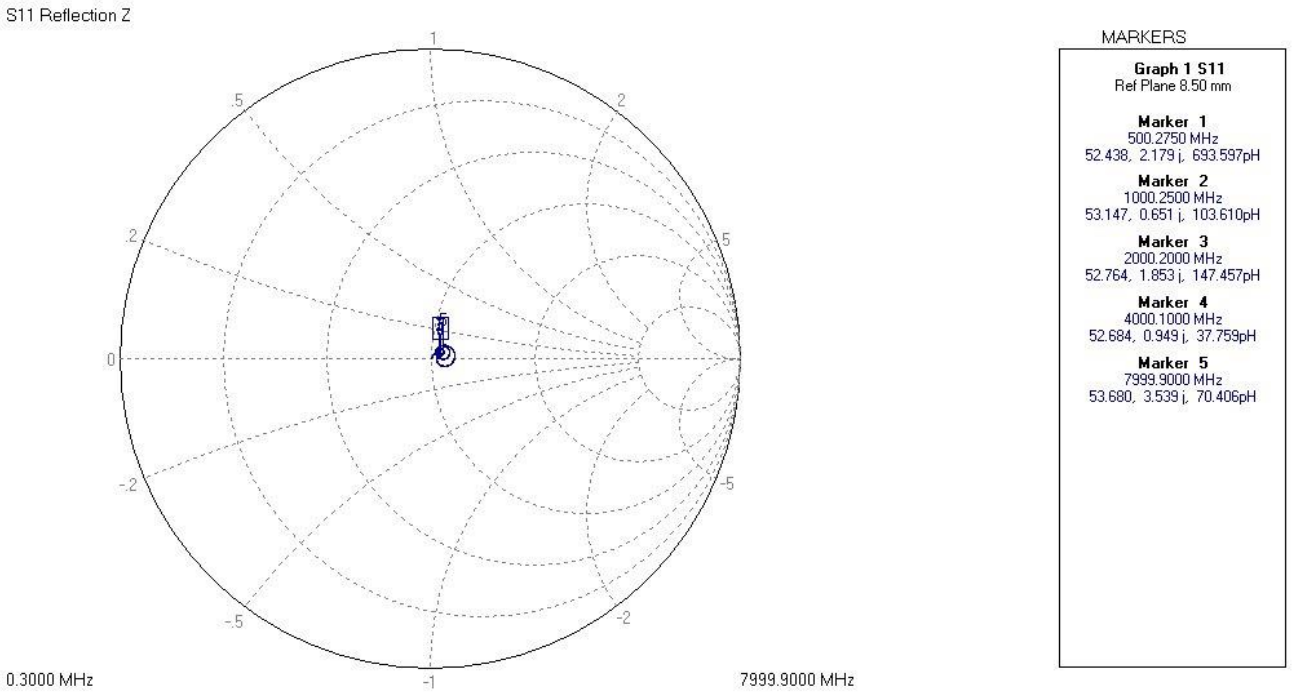

© All rights reserved by Wurth Electronics, also in the event of industrial property rights. All rights of disposal such as copying and redistribution rights with us.

Specification, Requirements & Performances

RF behavior

Calibrationboard

The adjustment of the line:

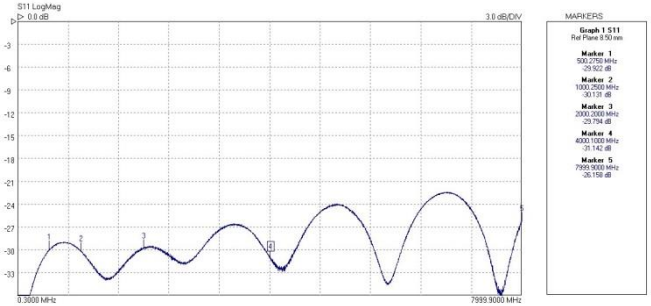

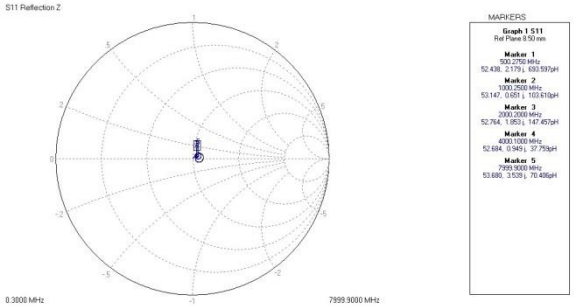

This corresponds to a line impedance of approximately 53 Ω.

© All rights reserved by Wurth Electronics, also in the event of industrial property rights. All rights of disposal such as copying and redistribution rights with us.

Specification, Requirements & Performances

RF behavior

Calibrationboard

Line length: smith open = 100mm (electrical)

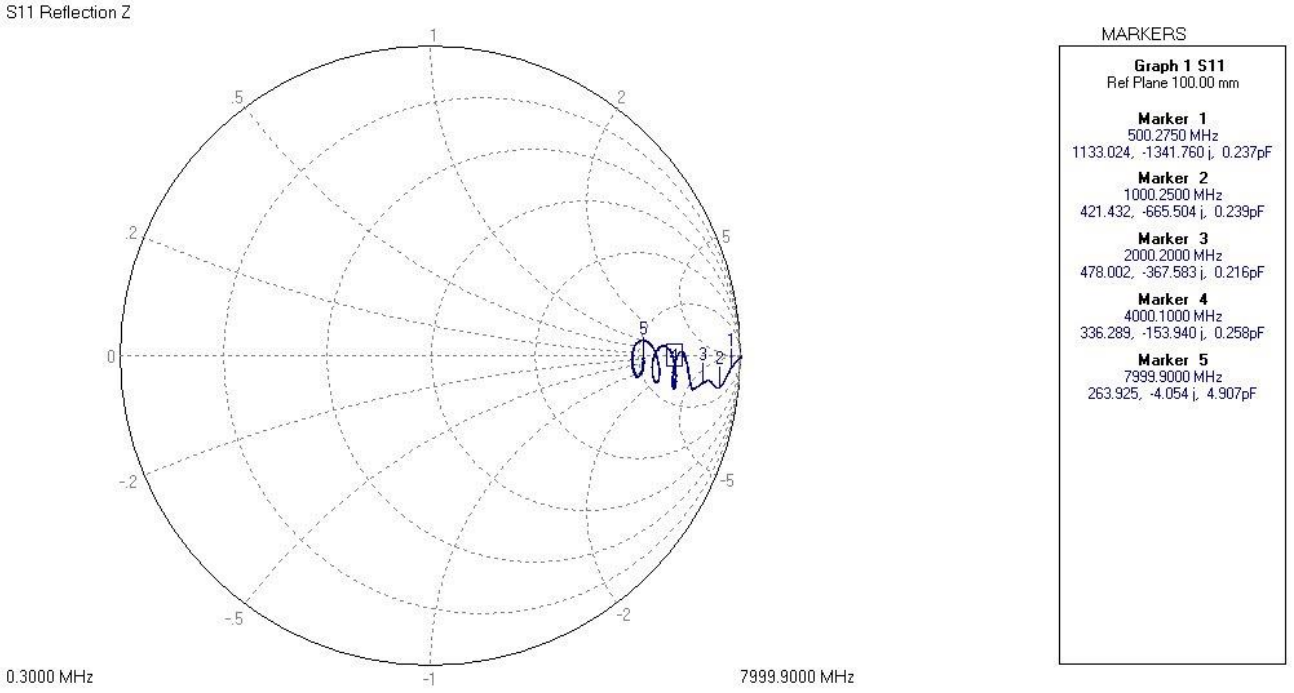

© All rights reserved by Wurth Electronics, also in the event of industrial property rights. All rights of disposal such as copying and redistribution rights with us.

Specification, Requirements & Performances

RF behavior

Calibrationboard

Line length: smith short = 99,79mm (electrical)

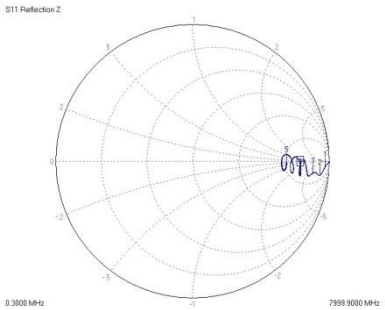

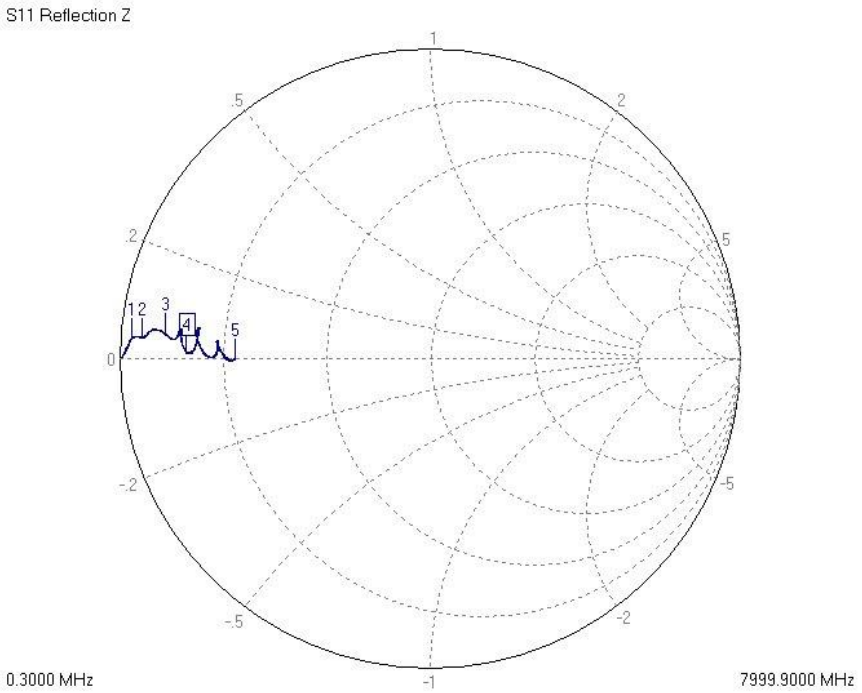

MARKERS

Graph 1 S11
Ref Plane 99.79 mm

Marker 1
500.2750 MHz
0.882, 1.701 j, 541.445pH

Marker 2
1000.2500 MHz
1.729, 1.819 j, 289.503pH

Marker 3
2000.2000 MHz
3.699, 2.374 j, 188.917pH

Marker 4
4000.1000 MHz
5.882, 0.677 j, 26.937pH

Marker 5
7999.9000 MHz
11.269, 0.014 j, 0.279pH

© All rights reserved by Wurth Electronics, also in the event of industrial property rights. All rights of disposal such as copying and redistribution rights with us.

Specification, Requirements & Performances

RF behavior

Calibrationboard

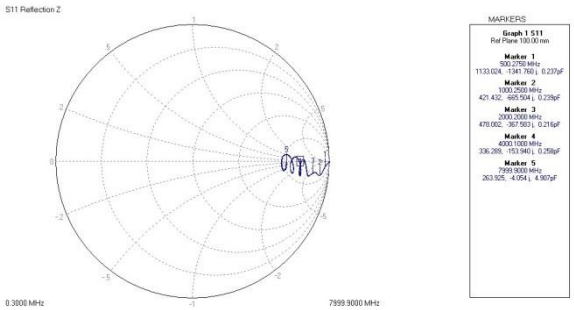

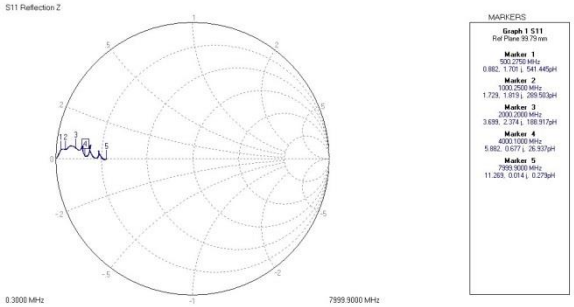

With an SMA plug length of 8.5mm this gives an electrical length of 91.4mm.

With a mechanical length of 51.0 mm, this results in a shortening factor of 0.558 and thus a running time of 5977ps / m (compared to 5725ps / m).

© All rights reserved by Wurth Electronics, also in the event of industrial property rights. All rights of disposal such as copying and redistribution rights with us.

Specification, Requirements & Performances

RF behavior

Calibrationboard

Insertion loss (refelction loss open / short)

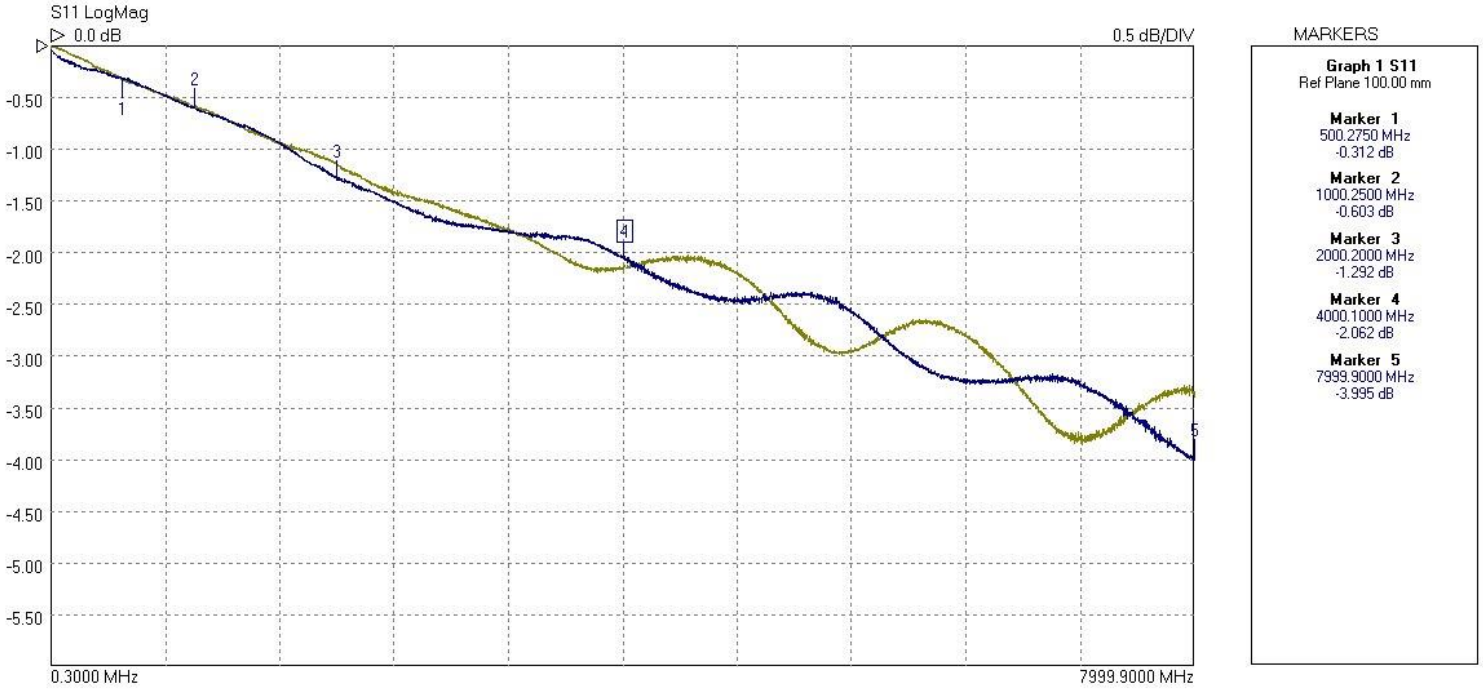

© All rights reserved by Wurth Electronics, also in the event of industrial property rights. All rights of disposal such as copying and redistribution rights with us.

Specification, Requirements & Performances

RF behavior

Calibrationboard

Insertion loss (refelction loss open / short)

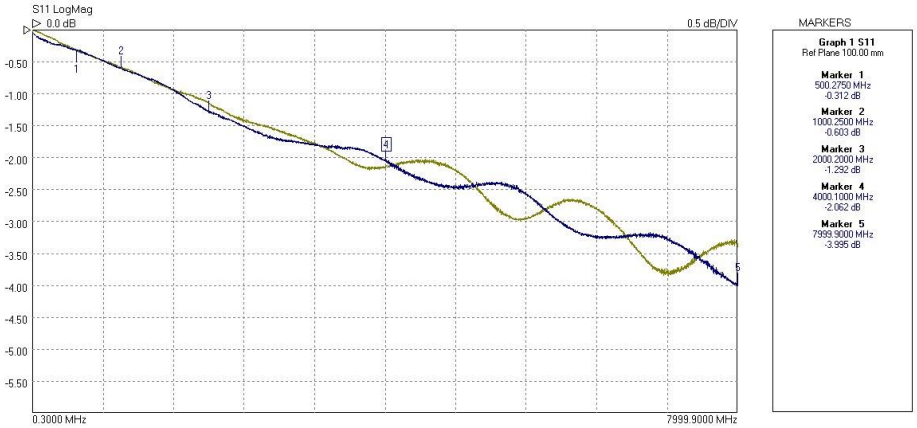

As expected, open and short show a counter-image.

The real attenuation is half the value since the wave is attenuated on the return path.

1.5 dB / m at 0.5 GHz
3 dB / m at 1 GHz
6 dB / m at 2 GHz
10.5 dB / m at 4 GHz
19 dB / m at 8 GHz

© All rights reserved by Wurth Electronics, also in the event of industrial property rights. All rights of disposal such as copying and redistribution rights with us.

Specification, Requirements & Performances

RF behavior

Testboard

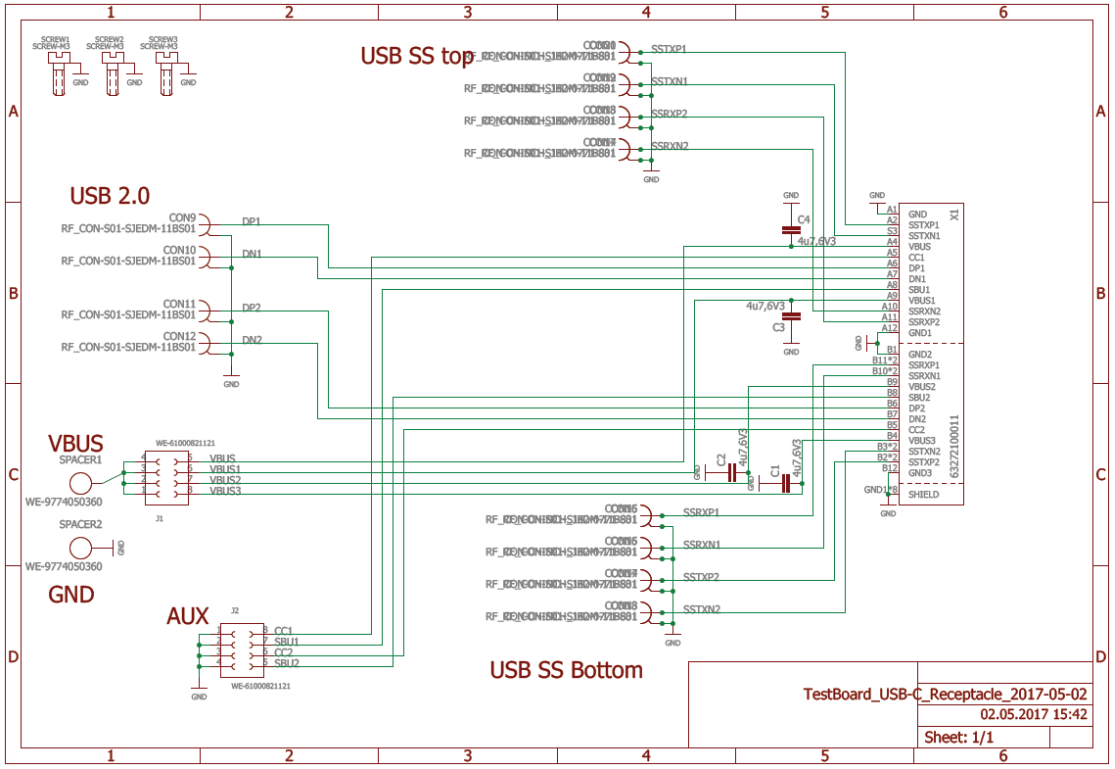

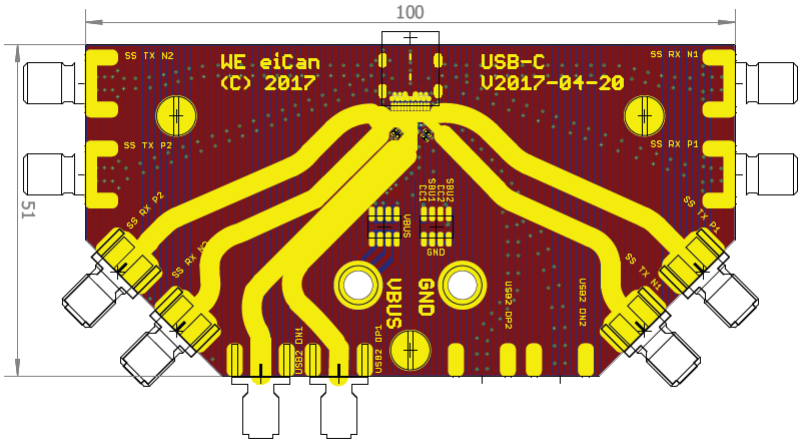

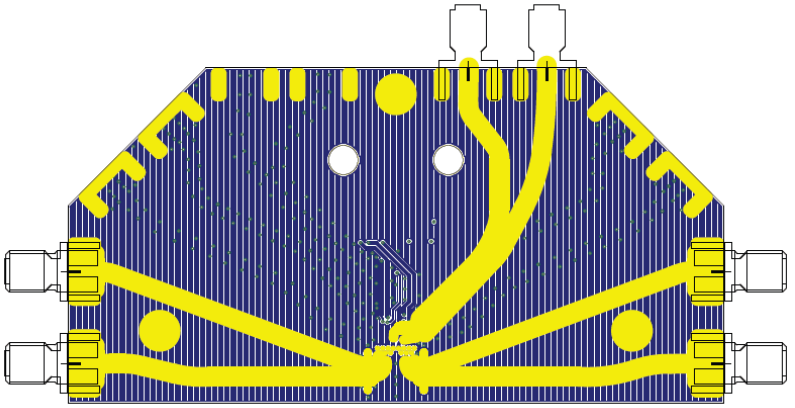

© All rights reserved by Wurth Electronics, also in the event of industrial property rights. All rights of disposal such as copying and redistribution rights with us.

Specification, Requirements & Performances

RF behavior

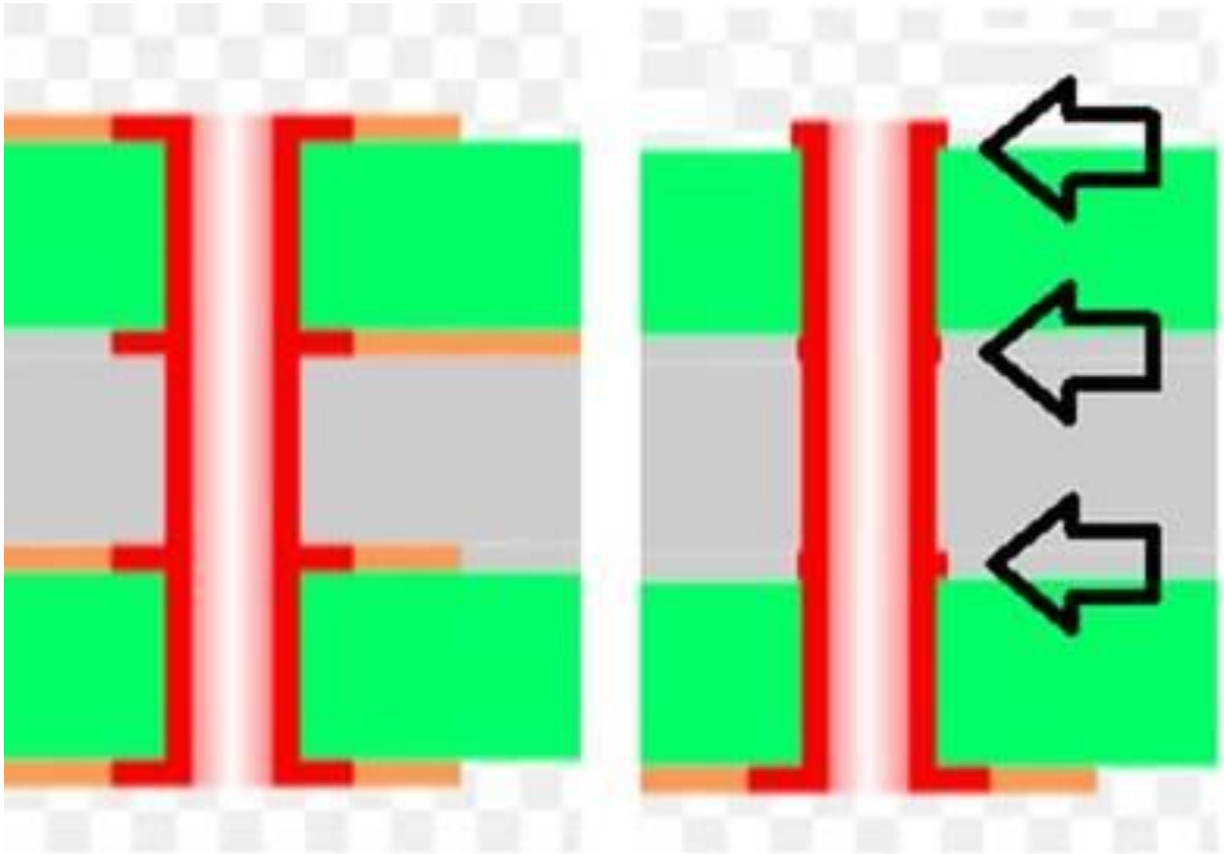

Testboard

VIA preperation:

Without rest ring is important to avoid capacitive and inductive effects between the layers.

© All rights reserved by Wurth Electronics, also in the event of industrial property rights. All rights of disposal such as copying and redistribution rights with us.

Specification, Requirements & Performances

RF behavior

VIA
USB-C (Hybrid mount 623723300011)
USB-C Plug

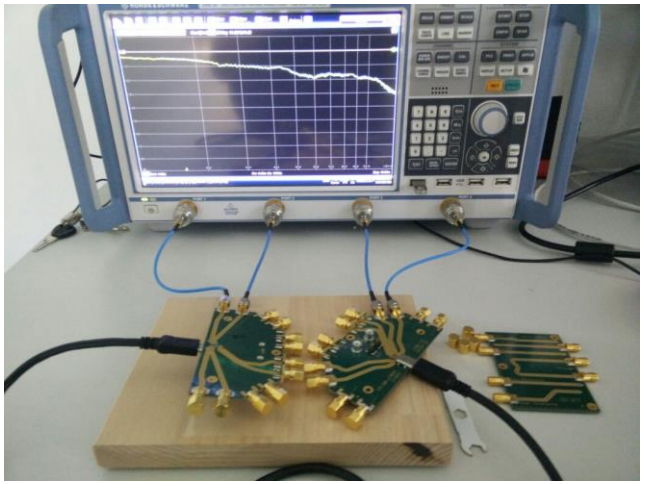

VIA
USB-C (Hybrid mount 623723300011)
USB-C Plug

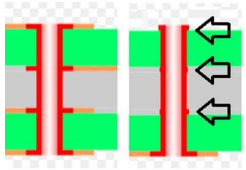

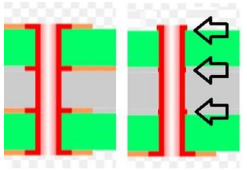

USB Cable (632910731731)
USB3.1 cable C Male to C Mail 100cm length)

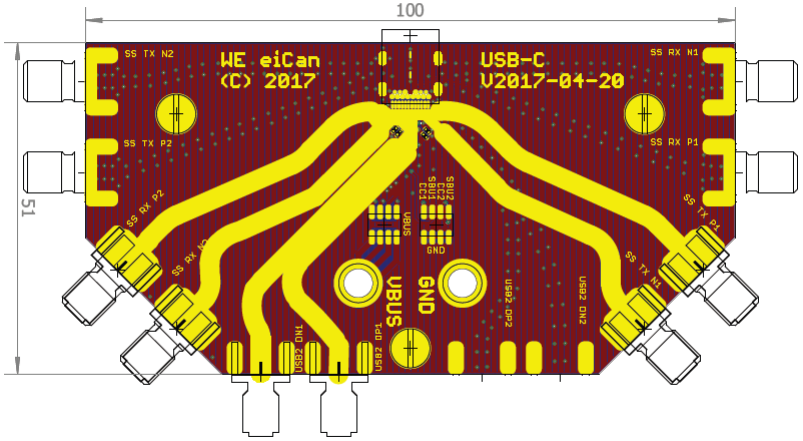

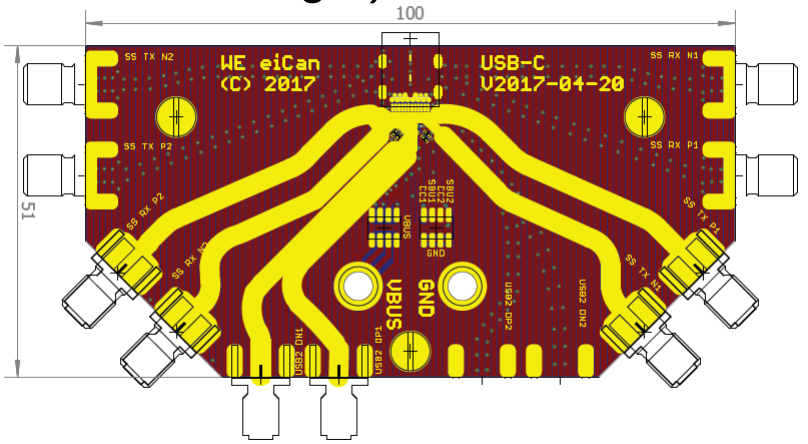

© All rights reserved by Wurth Electronics, also in the event of industrial property rights. All rights of disposal such as copying and redistribution rights with us.

Specification, Requirements & Performances

RF behavior

Attenuation:

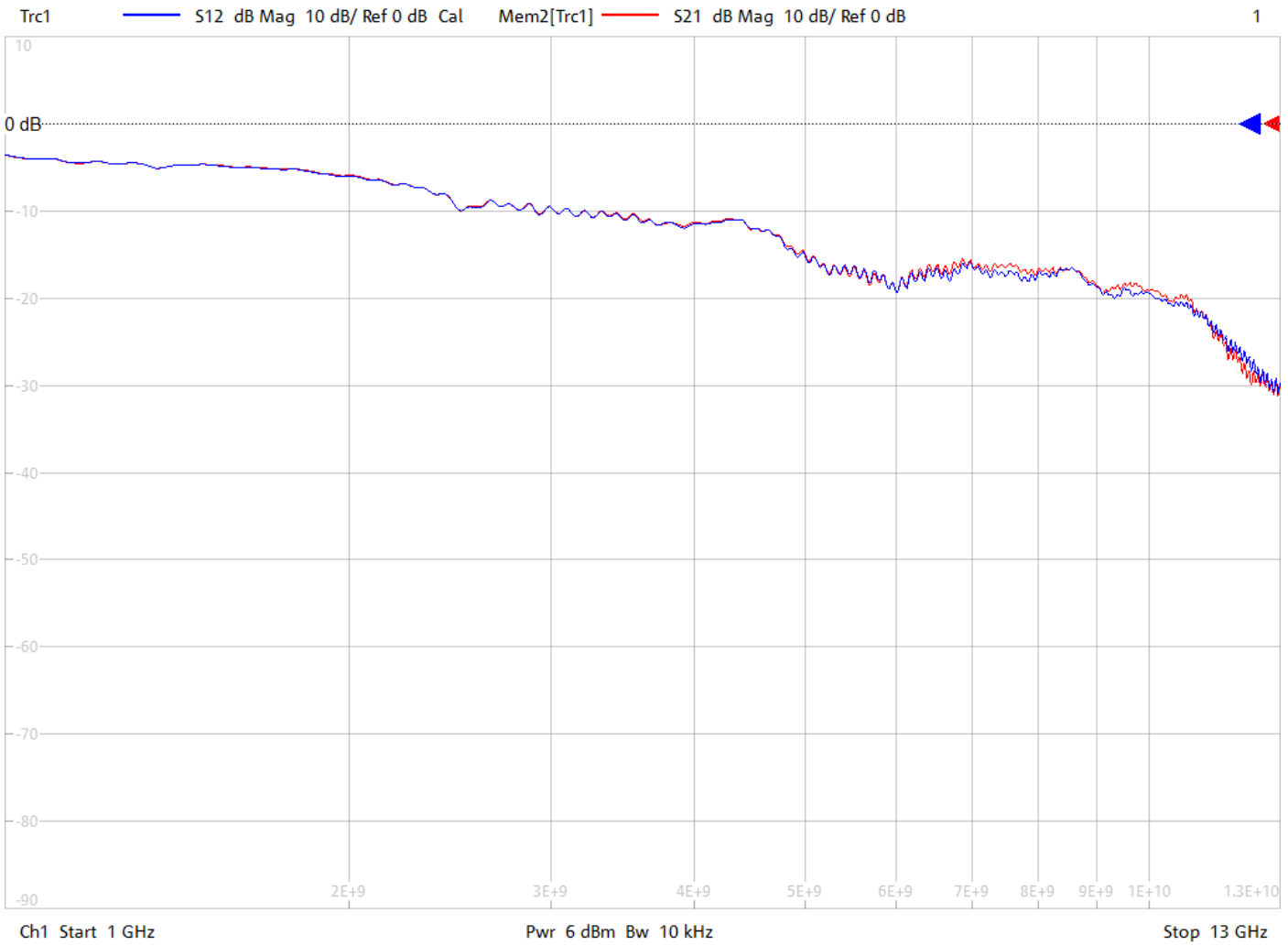

© All rights reserved by Wurth Electronics, also in the event of industrial property rights. All rights of disposal such as copying and redistribution rights with us.

Specification, Requirements & Performances

RF behavior

Attenuation D1 – D1:
(S12 – S34)

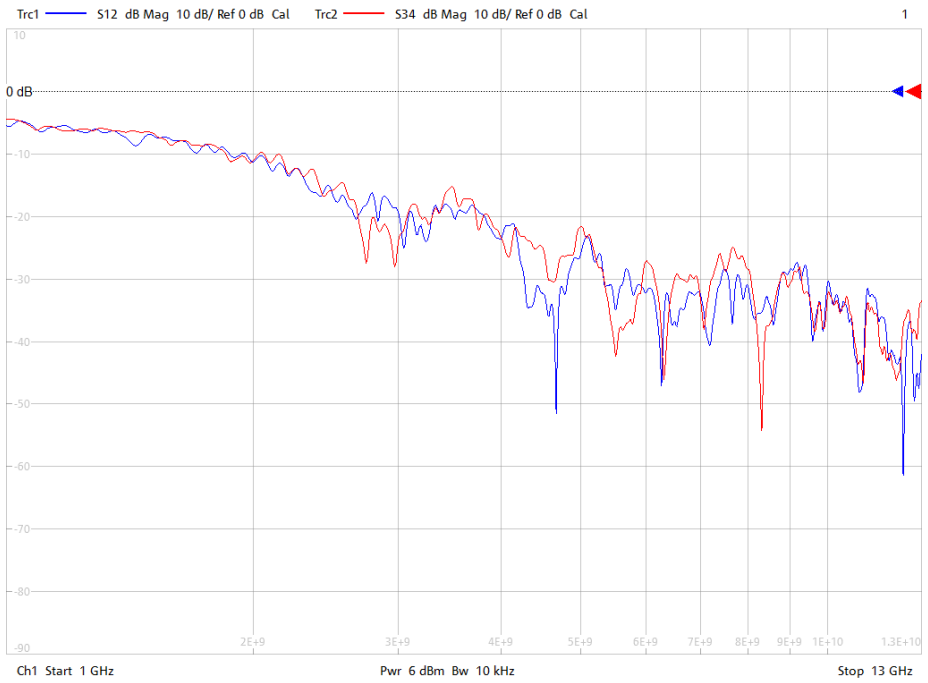

Attenuation D2 – D2:
(S32 – S41)

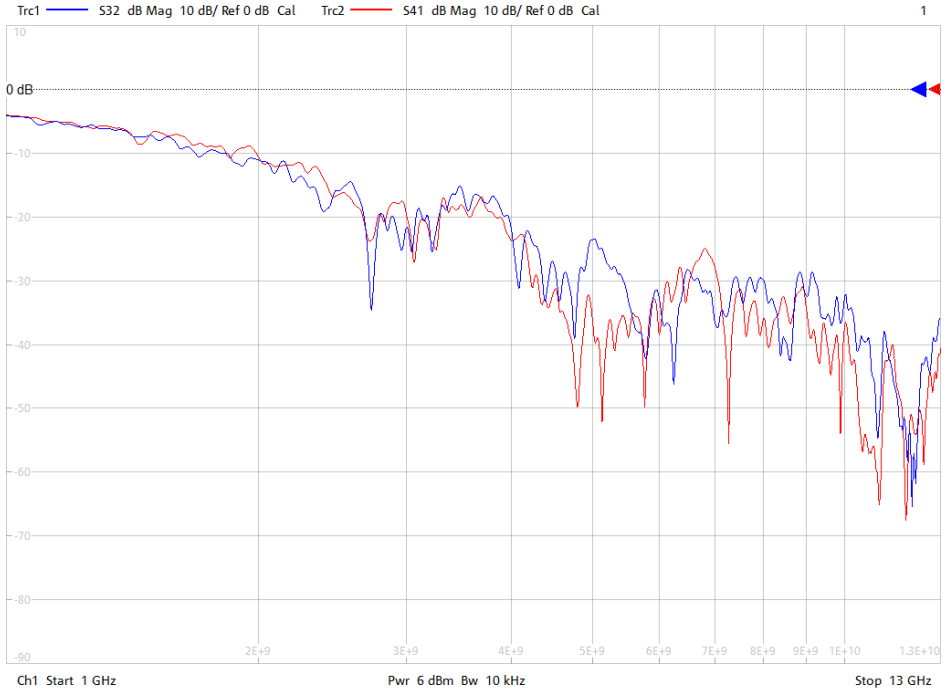

Pairs of datalines are nearly simmilar!

© All rights reserved by Wurth Electronics, also in the event of industrial property rights. All rights of disposal such as copying and redistribution rights with us.

Specification, Requirements & Performances

RF behavior

Attenuation and crosstalk:

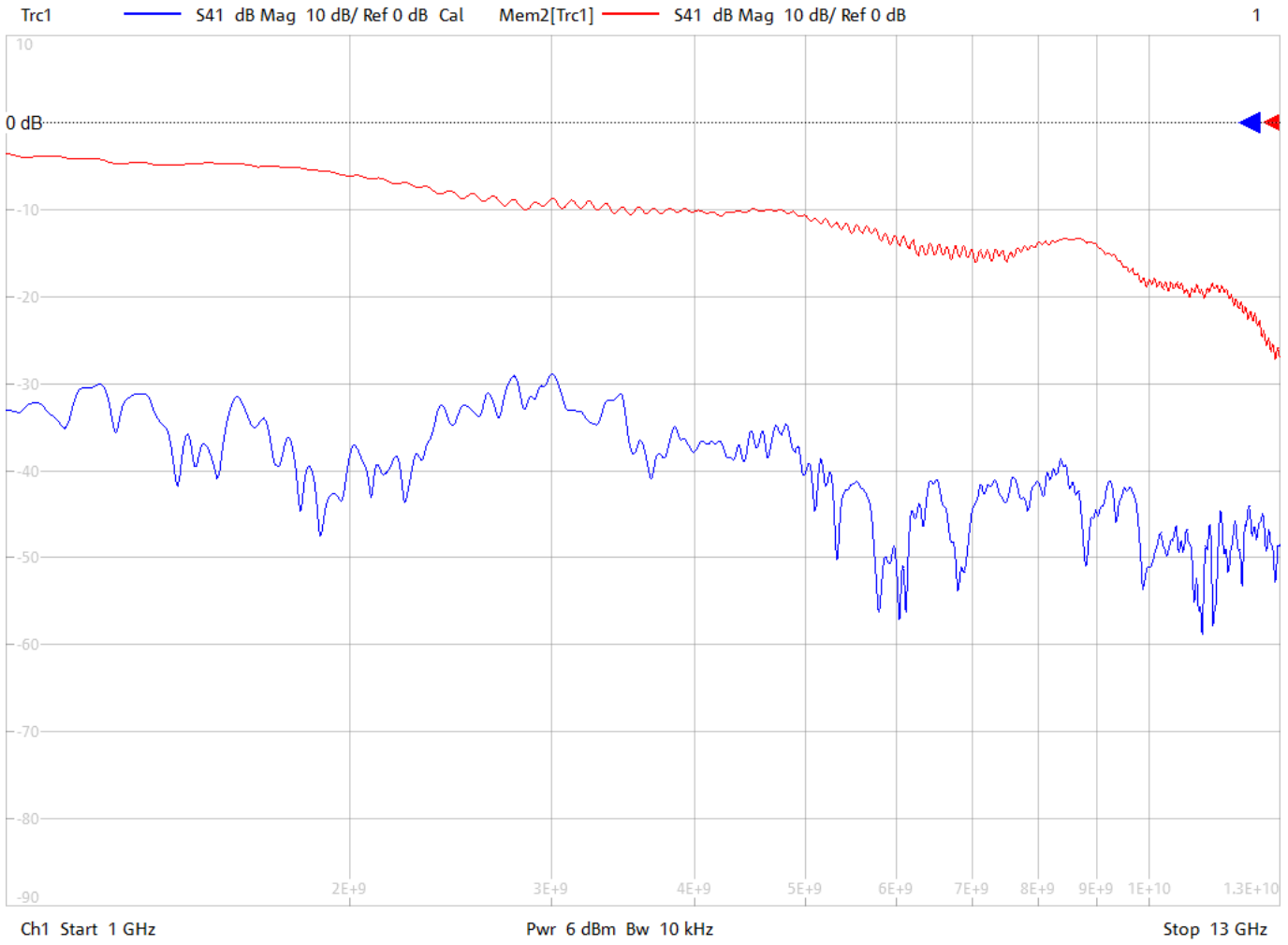

© All rights reserved by Wurth Electronics, also in the event of industrial property rights. All rights of disposal such as copying and redistribution rights with us.

Specification, Requirements & Performances

RF behavior

Integration of measurement in LTSpice:

integrating a set of parameter

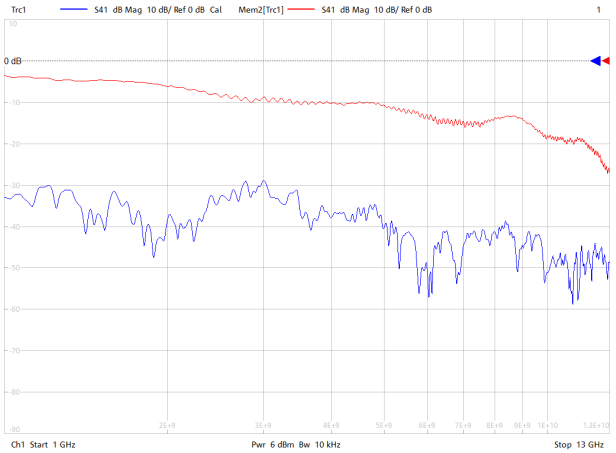

s2spice

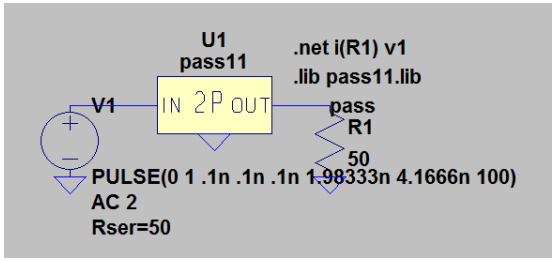

© All rights reserved by Wurth Electronics, also in the event of industrial property rights. All rights of disposal such as copying and redistribution rights with us.

Specification, Requirements & Performances

RF behavior

Integration of measurement data:

WHY ?

- **For many RF-components an LT-Spice model is not available**
- **For nearly every RF-component S-Parameter sets are available**
- **You can find a s2spice-converter at LTSpice-Group**
  http://tech.groups.yahoo.com/group/LTspice/files/%20Tut/S-Parameter/S-Parameter%20to%20SPICE/
- **The S2spice-converter changes S-Parameter sets in touchstone format to LTSpice library data sets**

© All rights reserved by Wurth Electronics, also in the event of industrial property rights. All rights of disposal such as copying and redistribution rights with us.

Advantages of this USB 3.1 c type connector

Features

Key features of this new connector:

- Higher durability
- Higher data rate
- Higher current capability (Power supply)
- Reversibility feature
- Short Type (for integrated applications)

Compatibility with different protocols:

HDMI
Thunderbolt…

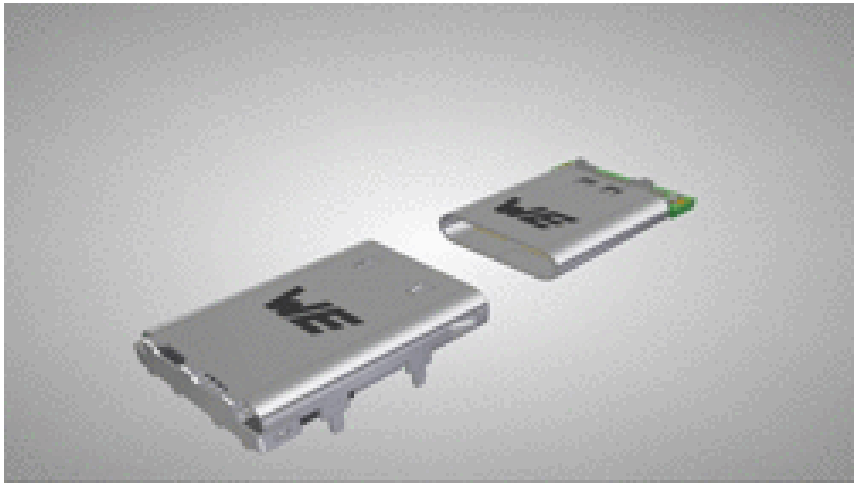

© All rights reserved by Wurth Electronics, also in the event of industrial property rights. All rights of disposal such as copying and redistribution rights with us.

Advantages of this USB 3.1 C type connector
Features

- How to increase data rate?
  - Improve EMC performances: Shielding change
  - Protocol modification: ≈ 20% additional BandWidth (BW)
    - 5 Gbps for Gen 1 in 8b/10b code
    - 10 Gbps for Gen 2 in 128b/132b code
    - Change of polynomial scrambling / encoding
  - Decrease tolerable Jitter regarding USB 3.0 for maintaining BER at 10^{-12}
    - From 200ps to 100ps on all Tx-Media-Rx chain
    - Including crosstalk & ISI after equalization

© All rights reserved by Wurth Electronics, also in the event of industrial property rights. All rights of disposal such as copying and redistribution rights with us.

Where to use it ?

Applications for USB (3.1 C type)

- USB Sticks
- Adapters
- Mouse
- Keyboards
- Hard drives
- Printers
- Video / Camera
- Mobile phones
- Set-top Boxes
- Medical equipment
- Industrial testers

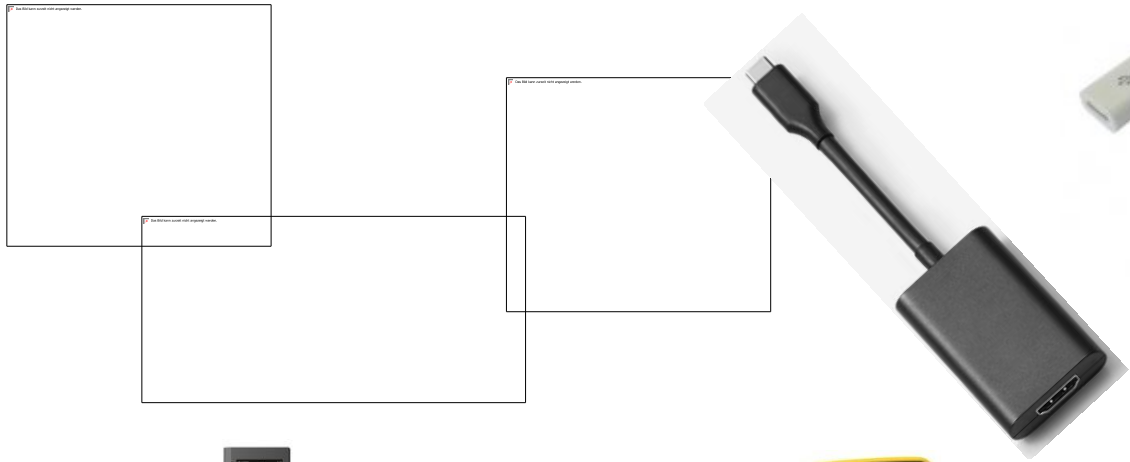

© All rights reserved by Wurth Electronics, also in the event of industrial property rights. All rights of disposal such as copying and redistribution rights with us.

Where to use it ?

Applications for USB (3.1 C type)

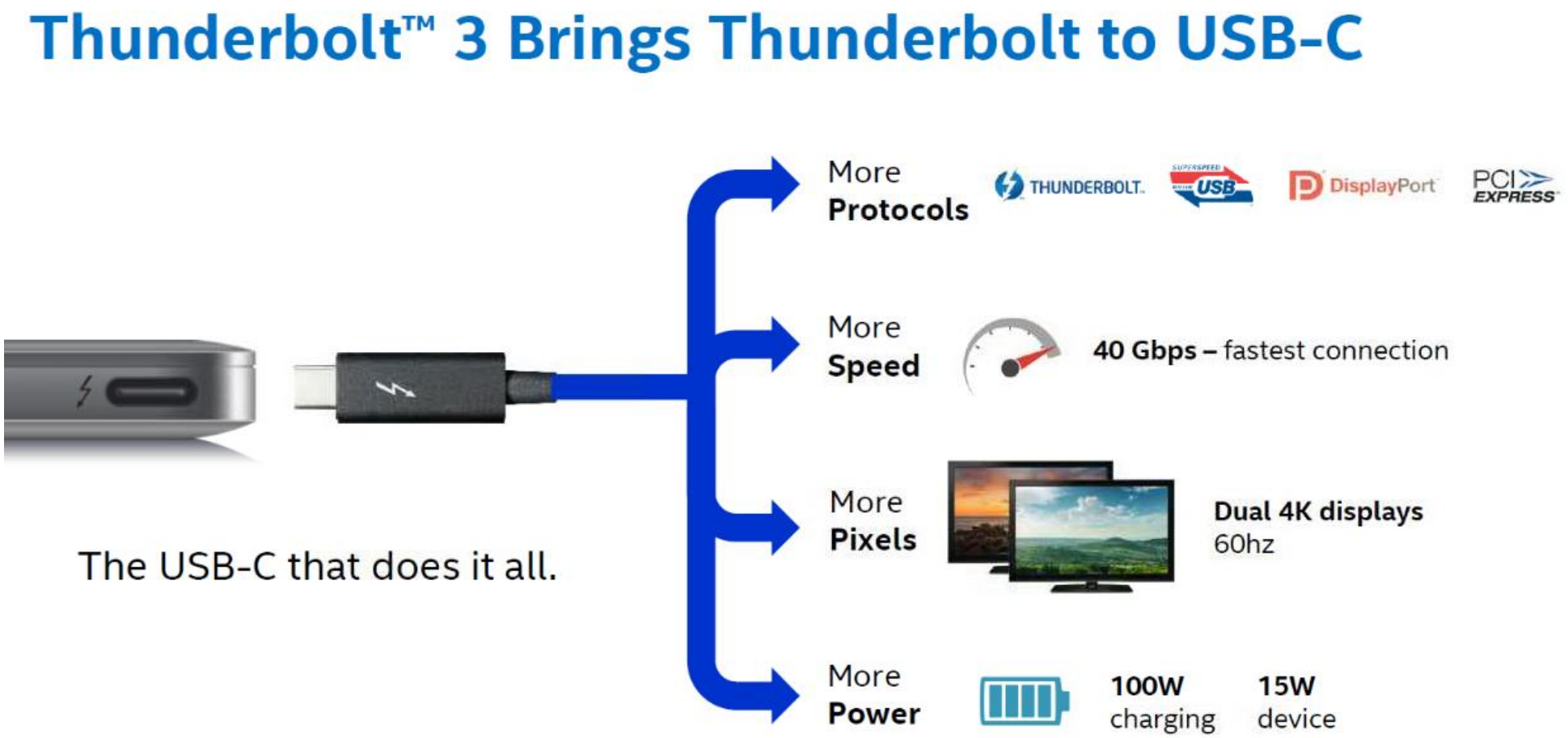

Source: https://www.golem.de/news/ueberblick-wir-entwirren-den-kabelsalat-um-usb-typ-c-1601-118667.html

© All rights reserved by Wurth Electronics, also in the event of industrial property rights. All rights of disposal such as copying and redistribution rights with us.

Conclusion

Applications for USB (3.1 C type)

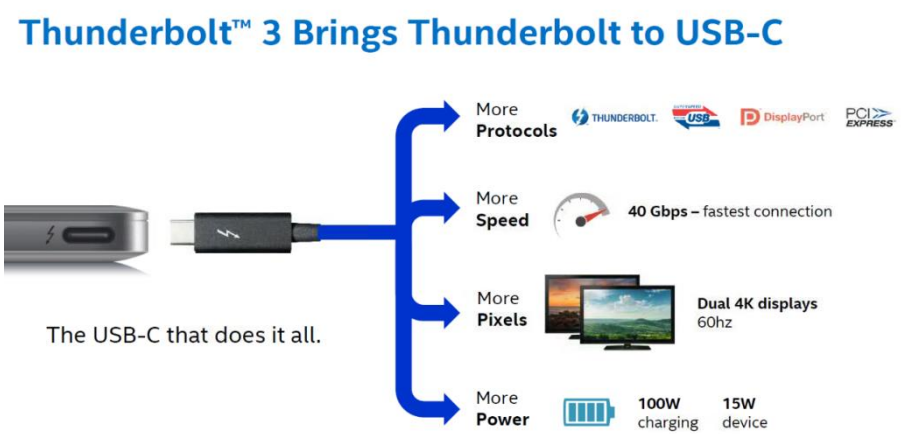

Source: https://www.golem.de/news/ueberblick-wir-entwirren-den-kabelsalat-um-usb-typ-c-1601-118667.html

Mechanical Performance

- 10.000 mating cycles
- High extraction (retention) force
- Long time reliability
- Time saving (only one type of connector is needed)
- Space saving

RF Behaviour

- high data rate (over 10GHz)
- EMC / EMI protection
- mix mode is possible (e.g. USB 2.0 & I²C; USB 2.0 and DC/DC controller)

Electrical Performance

- 5V / 12V / 20V
- up to 5A
- PD (up to 100W)

© All rights reserved by Wurth Electronics, also in the event of industrial property rights. All rights of disposal such as copying and redistribution rights with us.

Where to use it ?

Applications for USB (3.1 C type)

Where ***NOT*** to use it ?

© All rights reserved by Wurth Electronics, also in the event of industrial property rights. All rights of disposal such as copying and redistribution rights with us.

© All rights reserved by Wurth Electronics, also in the event of industrial property rights. All rights of disposal such as copying and redistribution rights with us.